TECHNICAL DESCRIPTION

Safety Light Curtain C 2000
Multi-Beam Photoelectric Safety Switch M2000

SICK

Note
The information contained in this document may be changed or supplemented without prior notice.

 © SICK AG • Sicherheitstechnik • Germany • All rights reserved

Contents

1 Document information 5
1.1 Function of this document 5
1.2 Target group of this document 5
1.3 Depth of information of this document 5
1.4 Symbols used in this document 5
2 Safety 6
2.1 Safety regulations 6
2.2 Areas of use of the device 7
2.3 Intended use of the device 8
2.4 General safety advice and protective measures 8
2.5 Test instructions 10
2.6 Environmental considerations 11
3 Product description 12
3.1 Specification of C 2000, M 2000 12
3.2 Specification of M 2000-A/P 14
3.3 Device functions 15
3.4 Displays 23
3.5 Master reset procedure 24
3.6 Determining the safety distance 25
3.7 Application examples 30
4 Installation 32
4.1 Mounting with swivel-mount bracket 33
4.2 Mounting with side mounting bracket 35
5 Electrical installation 36
5.1 Electrical connections, Hirschmann connector 36
5.2 Electrical connections, M 12 connector 40
5.3 Electrical connections, RES socket 42
5.4 Wiring diagrams 43
6 Commissioning 49
6.1 Overview of commissioning procedure 49
6.2 Alignment of the light beams 50
7 Troubleshooting 51
8 Maintenance 54
8.1 In-service care 54
8.2 Maintenance 54
9 Technical data 55

 © SICK AG • Sicherheitstechnik • Germany • All rights reserved

Contents

10 Ordering data 58
10.1 Ordering data, C 2000 60
10.2 Ordering data, M 2000 65
11 Appendix 68
11.1 Accessories 68
11.2 Diagrams and tables 70
11.3 Declaration of conformity 87
11.4 Checklist 89

 © SICK AG • Sicherheitstechnik • Germany • All rights reserved

1 Document Information

1.1 Function of this document

This document provides information on the C 2000 safety light curtain and the M 2000 multi-beam photoelectric safety switch. Points covered are:

- Safety
- Design and mode of operation
- Use of the device
- Device interfaces
- Maintenance

1.2 Target group of this document

This document is aimed at the following groups:

- Machine designers
- Production Engineers
- Buyers
- Health and safety representatives
- Maintenance personnel

1.3 Depth of information of this document

This document contains all the information required for planning, procurement and maintenance of the devices. It provides information concerning their function, potential applications and installation.

More detailed information can be obtained directly from your local SICK office.

1.4 Symbols used in this document

Some of the information presented in this document is highlighted in order to help you access it quickly and conveniently.

© SICK AG • Sicherheitstechnik • Germany • All rights reserved

Note Notes provide information on special features of the device.

Explanation An explanation provides background knowledge, which will help you understand the technical functions and features of the device.

Recommendation A recommendation will help you to get the best from your device.

Warning

Warning!

➢ Always read warning notices carefully and follow them closely.

2 Safety

The devices can only perform their safety function if they are used correctly and integrated into the process in a failsafe way.
The C 2000 safety light curtain and the M 2000 multi-beam photoelectric safety switch meet the requirements of type 2 devices as laid down in IEC 61496.

2.1 Safety regulations

- Installation and electrical connections may only be carried out by qualified personnel.

  Qualified in this context means that personnel have undergone specialist training and have gained experience of power-driven machinery/equipment. They are also required to be sufficiently familiar with the relevant national health and safety regulations, accident prevention regulations, directives and codes of practice to be able to assess the safe condition of any power-driven machinery/equipment. Such persons are normally qualified personnel of the manufacturers of the **a**ctive **o**pto-electronic **p**rotective **d**evices (AOPD) or personnel who have been trained accordingly by the device manufacturers and are engaged primarily for the testing of active opto-electronic protective devices and have been commissioned by the device operators.

 © SICK AG • Sicherheitstechnik • Germany • All rights reserved

- Installation, commissioning, use and routine technical inspections of the C 2000 safety light curtain and the M 2000 multi-beam photo-electric safety switch is subject to national and international legal regulations and standards, in particular:

  – Machinery Safety Regulations 98/37 EC
  – Provision and Use of Work Equipment Regulations 89/665 EEC
  – Relevant safety regulations
  – Accident prevention regulations and safety guidelines.

  The manufacturers and operators of the machinery on which our safety devices are used are solely responsible for ensuring all applicable safety guidelines and regulations from the relevant authorities are observed and complied with.

- In addition, our recommendations, **in particular instructions for testing** (see section *2.5 Test instructions*) set out in this Technical Description and in the Operating Instructions (including instructions relating to use, mounting, installation and integration into the machine control system) - must be followed.

- The tests must be performed by **qualified experts** or by **specially authorised and instructed personnel** and must be documented in such a way as to be able to be viewed and understood at any time.

- Our Operating Instructions must be made available to **the employee** (operator) of the machine on which our safety device is used. The employee must be instructed **by qualified experts.**

2.2 Uses of the equipment

2.2.1 C 2000, M 2000, M 2000-A/P

The C 2000 safety light curtain is designed to provide hand protection at danger zones on machinery and plant. The M 2000 multi-beam photo-electric safety switch is used to guard access to hazardous areas on machinery or plant. The devices must be securely mounted to the points of access to the danger areas and any hazardous movement stopped when at least one light beam is interrupted.

 © SICK AG • Sicherheitstechnik • Germany • All rights reserved

Note **The C 2000 and M 2000 devices operate as standalone devices or in systems in conjunction with a safe control system, emergency-stop modules or the safety evaluation unit LE 20.**

2.3 Intended use of the device

The C 2000 safety light curtain and the M 2000 multi-beam photoelectric safety switch may only be used as specified in section 2.2, *Uses of the equipment*. The devices may be operated only in accordance with their technical specifications. Any other use or modification, including during mounting and installation, will invalidate any guarantee and any claim against SICK AG.

2.4 General safety advice and protective measures

The instructions set out in the following sections must be followed in order to ensure the correct use of the devices.

2.4.1 Definition of terms

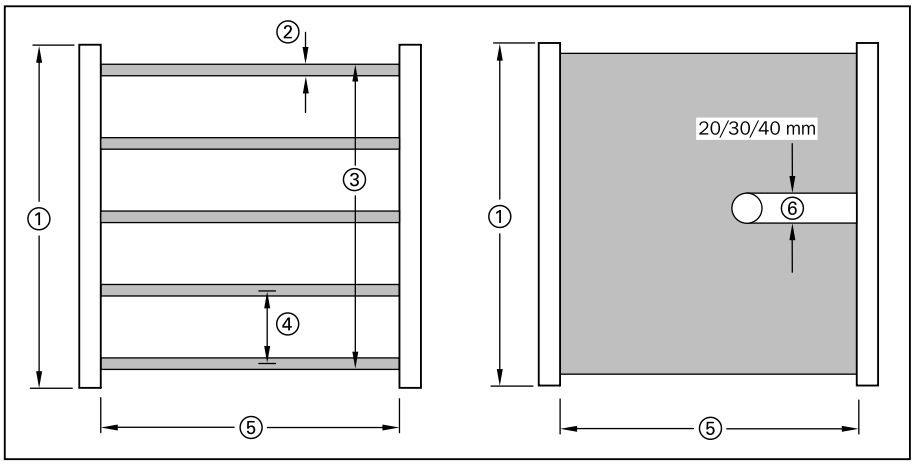

Fig. 2-1: Definition of terms
① = Housing length ③ = Protective field height ⑤ = Protective field width
② = Light beam diameter ④ = Beam gap ⑥ = Resolution

2.4.2 General advice to ensure the protective function

The protective function is only assured if the following conditions are fulfilled:

 © SICK AG • Sicherheitstechnik • Germany • All rights reserved

- The control system of the machine or plant must be capable of being controlled by electrical signals.
- The hazardous movement of the machine must be able to be stopped at any time.
- The application and installation of the photoelectric switches is subject to the relevant legal and local authority requirements.
- The photoelectric switches must be mounted such that when at least one light beam is broken the danger point is not reached until the hazardous condition is eliminated. This requires compliance with the necessary safety distances to EN 999.
- It must be ensured that any hazardous operation cannot be initiated when persons are in the danger area.
- The external power supply to the devices must be capable of withstanding a short-term power failure of 20 ms in accordance with EN 60204. Suitable power supply units are available from SICK as accessories (Siemens series 6 EP 1).
- The *Importance Notice* label must be affixed in a clearly visible position close to the sender or receiver unit.
- Testing before initial start-up serves the purpose of confirming that the safety requirements demanded by national/international regulations, in particular, Machinery Directive and Provision and use of work equipment Directive are fulfilled.

2.4.3 Ensuring the protective function, C 2000

- The resolution of the sender and receiver must match.
- It must not be possible to reach over, under or around the device, or to walk behind it.

Fig. 2-2: Mounting of the C 2000: Reaching over, under or around the device, or walking behind it, must not be possible.

© SICK AG • Sicherheitstechnik • Germany • All rights reserved

2.4.4 Ensuring the protective function, M 2000

- The number of beams and beam gap of the sender and receiver must match.
- Access to the danger area must only be possible by passing through the safety light beams.

2.5 Test instructions

2.5.1 Testing of the protective device by an expert, before initial start-up of the machine

- Test before initial start-up to confirm that the safety requirements demanded by national/international regulations, in particular, Machinery Directive and Provision and use of work equipment Directive are fulfilled.
- Test the effectiveness of the protective device on the machine in all operating modes programmable on the machine.
- The personnel operating the machine protected by the safety device must be instructed by qualified personnel prior to starting work. The instruction is the responsibility of the machine operating company.

2.5.2 Regular testing of the protective device by experts

- Testing must be carried out in accordance with the valid national and international regulations and standards at the intervals specified therein. The purpose of these tests is to reveal any modifications or manipulations of the protective device since the initial commissioning.
- The tests must be carried out in the event of any major modifications to the machine or protective device, as well as after re-fitting or repair in the event of damage to the housing, front screen, connecting cable, etc.

2.5.3 Daily testing of the protective device by authorised personnel

- **M 2000**
  By the operator, daily or prior to each work session by means of complete coverage of every beam of light.

 © SICK AG • Sicherheitstechnik • Germany • All rights reserved

- **C 2000**
  Move the test rod slowly through the length of the protective field (see rating plate: "Resolution") at three different points:

  1. Protective field limits/protective field markings close to sender (access opening)
  2. Protective field limits/ protective field markings close to receiver
  3. Protective field limits in middle between sender and receiver

Warning

Devices without restart interlock

If the green LED on the receiver lights up at any one point, work must not be allowed on the machine!

Devices with integral restart interlock

If the red and yellow LEDs on the receiver light up simultaneously at any one point, work must not be allowed on the machine!

- Check for damage to the protective device, in particular the mounting, electrical connection or front screen.
- Check for wear or damage to the housing, front screen or electrical connection cable.
- Check that people or body parts can only access the danger zone through the protective field of the C 2000/M 2000 (e.g. Do not remove mechanical protective devices).
- Test that the protection is effective for the set operating mode.

Warning

In case of error shut down the machine!

If one or more errors occur in the cours of the test, the machine must be shut down.

2.6 Environmental considerations

The C 2000 safety light curtain and the M 2000 multi-beam photoelectric safety switch are designed to have the lowest possible impact on the environment. They neither emit nor contain any environmentally damaging substances, and consume minimal quantities of energy and resources.

Always consider the environment in everything you do at the workplace. This also means complying with the following instructions concerning disposal.

© SICK AG • Sicherheitstechnik • Germany • All rights reserved

Disposal

SICK AG does not accept return of unusable or irreparable devices. When disposing of such devices:

1. Follow the applicable national regulations governing waste disposal.
2. Remove the housings of the devices.
3. Remove the front screen and ensure it is returned to the plastics recycling process.
4. Ensure the powder-coated housing is returned to the recycling process for aluminium.
5. Dismantle electronic modules and connecting cables.
6. Dispose of all electronic modules and connecting cables as special waste or electronic scrap.

3 Product Description

The C 2000 safety light curtain and the M 2000/M 2000-Active/Passive (A/P) multi-beam photoelectric safety switch can be used to monitor a danger zone or area within a machine or plant. If objects such as body parts (C 2000) or people (M 2000, M 2000-A/P) intrude in the protective field, the receiver unit provides a stop command. The machine or plant control, which evaluates the stop command, then stops the hazardous movement.
The photoelectric switches operate either with the safety evaluation unit LE 20 or as standalone devices in conjunction with a safe control system or other safety control modules. Refer to the SICK SAFETY SYSTEMS CIRCUITRY MANUAL for more information on integration of the devices in a safe control system.

3.1 Description, C 2000, M 2000

The C 2000 safety light curtain and the M 2000 multi-beam photoelectric safety switch each comprise a sender and a receiver. The sender and receiver are fitted with a 7-segment display and LEDs to indicate various status and diagnostic information. Types C 2000 and M 2000 differ in their resolution, housing size, transmission ranges (M 2000) and applications.

 © SICK AG • Sicherheitstechnik • Germany • All rights reserved

Specifications, C 2000 and M 2000

C 2000: Resolution of light curtain 20/30/40 mm,
Operating range 0 ...6 m or 2.5 ...19 m
For use as hand guard on machines

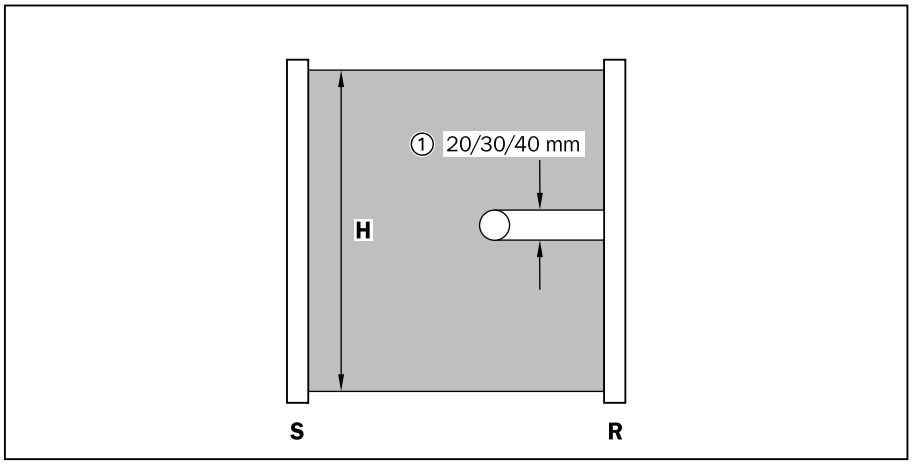

Fig. 3-1: Description and resolution, C 2000 safety light curtain
① = Resolution **H** = Protective field height **S** = Sender **R** = Receiver

M 2000: Resolution of multi-beam photoelectric switch 116/170 mm or 2-, 3-and 4-beam systems, operating range (two device versions) adjustable by operating range switching
0 ... 25 m (0 ... 6 m, 2 ... 25 m) or
0 ... 70 m (0 ... 20 m, 15 ... 70 m)
For use as access protection

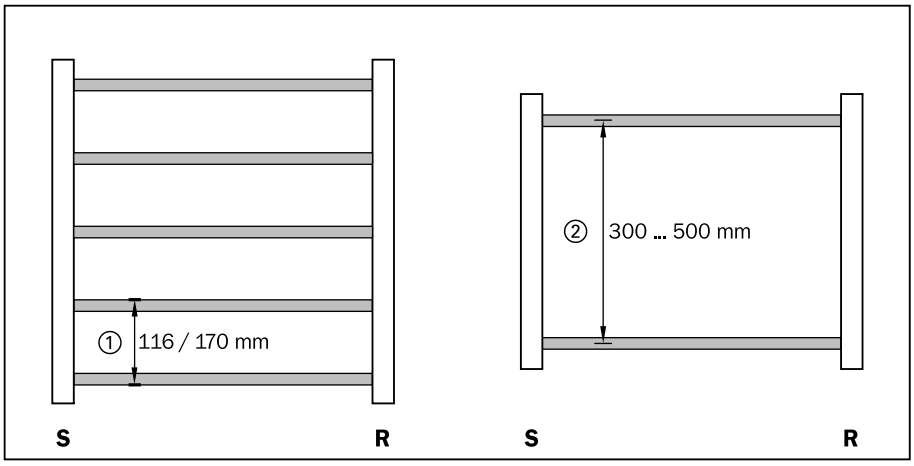

Fig. 3-2: Description, beam gap and resolution of M 2000 multi-beam photoelectric safety switch
① = Resolution ② = Beam gap **S** = Sender **R** = Receiver

The C 2000 and M 2000 devices are available in: Standard, Cascadable, RES (Restart interlock) and A/P (Active/Passive - M 2000 only) versions. Cascade versions have an expansion socket on the sender and the receiver, whereas RES versions have it on the sender only.

© SICK AG • Sicherheitstechnik • Germany • All rights reserved

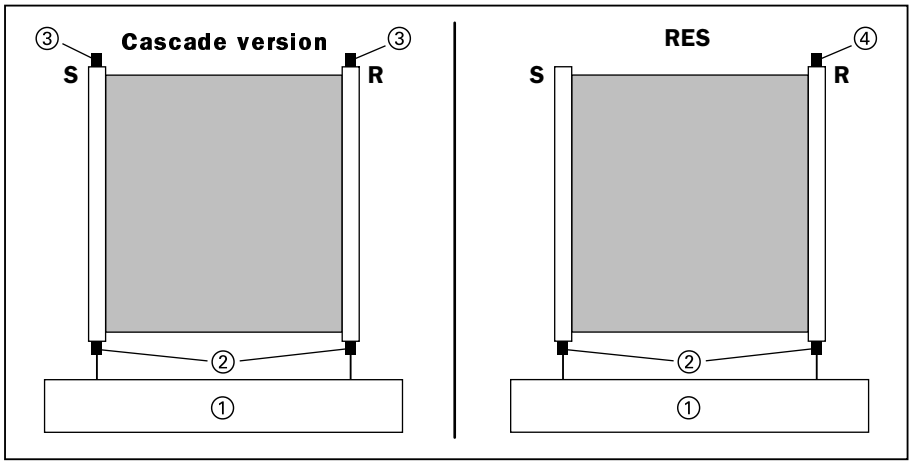

Fig. 3-3: C 2000/M 2000 Cascadable and RES
① = Machine ③ = Expansion sockets for cascading
② = System connector ④ = Connection for reset device
S = Sender **R** = Receiver

3.2 Description, M 2000-A/P

The multi-beam photoelectric safety switch M 2000-Active/Passive (A/P) has a beam gap of 500 mm and an operating range of 6 metres. It is used for the same safety functions as the type M 2000 with two safety light beams. The type M 2000-A/P consists of a sender/receiver combined module and a mirror module. The light beam emerges from the sender unit, is diverted by the mirror module and reflected to the receiver unit. The mirror module is a passive element, and therefore requires no electrical connections.

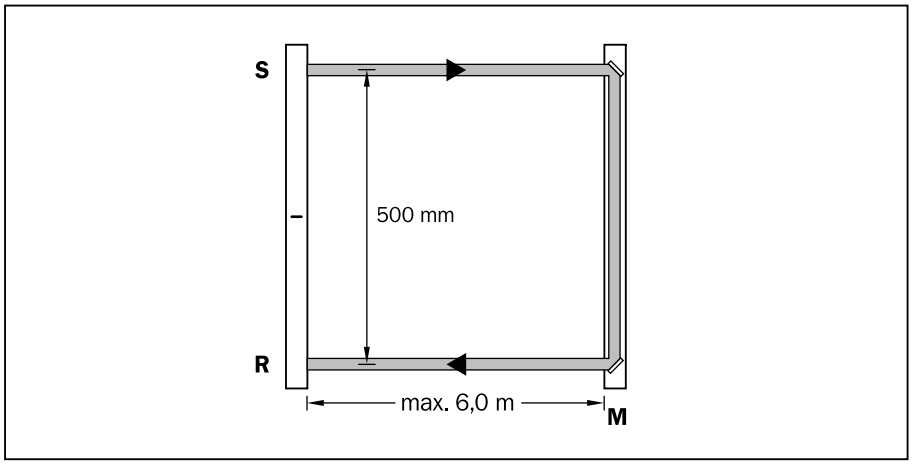

Fig. 3-4: Description and resolution, multi-beam photoelectric safety switch M 2000-A/P
S = Sender **R** = Receiver **M** = Mirror

The type M 2000-A/P is available in the Standard and RES (Restart interlock) variants. The RES variant sender/receiver module has an expansion socket.

 © SICK AG • Sicherheitstechnik • Germany • All rights reserved

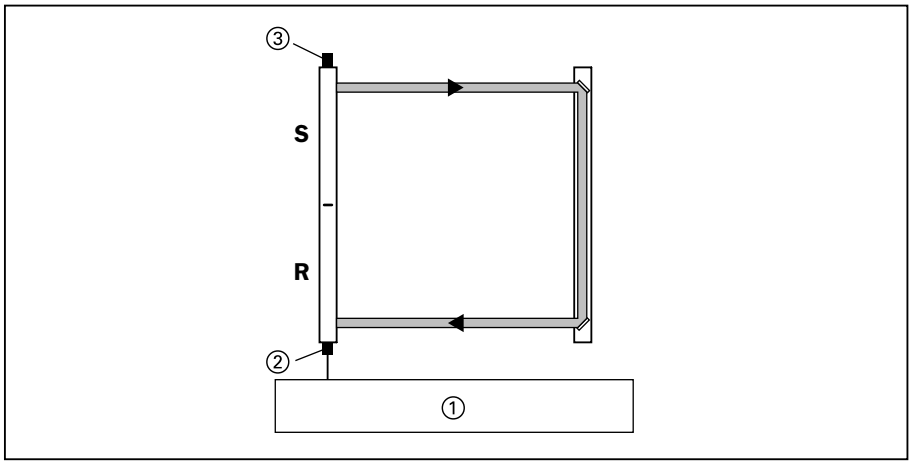

Fig. 3-5: M 2000-A/P RES
① = Machine
② = System connector
③ = Connection for reset device
S = Sender
R = Receiver

3.3 Device functions

3.3.1 Beam coding, multiple guard applications

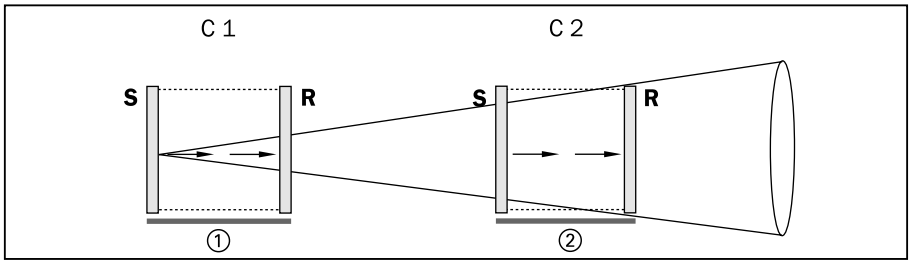

Fig. 3-6: Arrangement of senders and receivers, C 2000/M 2000, Standard and RES device versions with beam coding
C1, C2 = Beam coding 1, 2
S = Sender
R = Receiver
① = System 1
② = System 2

Where several senders and receivers need to be arranged in such a way that they could interfere with each other, coding of the light beams allows each receiver to recognise its own sender (see *Fig. 3-6*). Three beam codes are available.

Only two sender/receiver pairs should be mounted in the immediate vicinity of each other. The beam code is set by pins SEL 1 and SEL 2 of the sender and receiver being connected to 0 V, or by non-connection (see *Table 5-1*).

Note For type M 2000-A/P code 1 is preset at the factory. No additional beam coding is possible.

© SICK AG • Sicherheitstechnik • Germany • All rights reserved

Note The beam coding also enhances the interference resistance of the photoelectric switches to optical disturbance such as welding sparks, navigation devices and laser scanners. There is a choice of three different codings to increase availability in case of optical disturbance.

3.3.2 Cascading

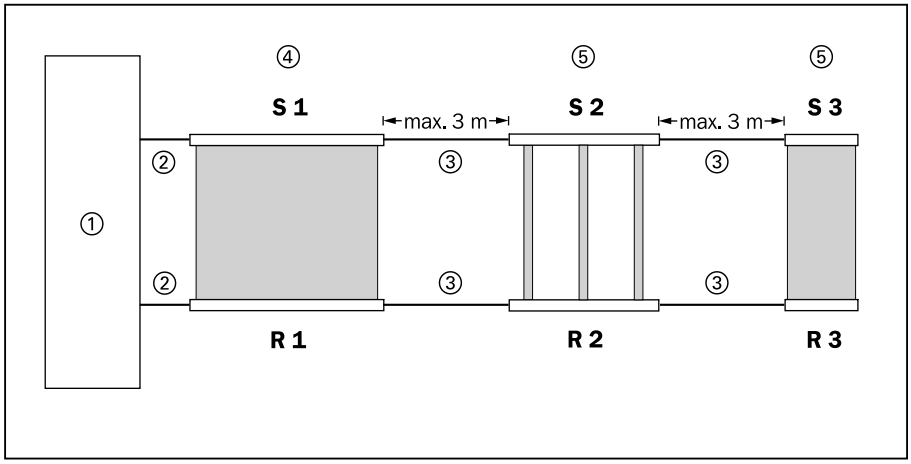

Fig. 3-7: Cascading of three devices, C 2000/M 2000
S 1, 2 = Sender (cascade version) **R 1, 2** = Receiver (cascade version)
S 3 = Sender (Standard) **R 3** = Receiver (Standard)
① = Machine control ② = System connector
③ = Cascade connection cables ④ = Host devices
⑤ = Guest devices G 1 and G 2

The cascade and standard versions have the following features:

Version	Features
Cascade version	The cascade version of the photoelectric safety switches are designed either for standalone operation or as a part of a cascade system. A cascade version of the photoelectric switch consists of a sender and a receiver, which can be extended by an additional cascade or standard device.
Standard	Standard photoelectric switches operate only as standalone systems or as terminal devices of a cascade.

Table 3-1: Operating features of C 2000 and M 2000 variants

In cascade, the system distinguishes between the host, guest 1 and guest 2 devices when there is differentiating diagnostic and error information. The host is the first device in the cascade and establishes the connection to the machine.

Note **The type M 2000-A/P is not available as a cascade version.**

 © SICK AG • Sicherheitstechnik • Germany • All rights reserved

To protect several different planes, up to three devices – two cascade devices and one standard device (as the terminal device in the cascade) – can be connected in series. Only the first cascade device is connected to the machine control, resulting in the entire arrangement operating in the same way as a single sender/receiver pair.

Please note the following points with regard to cascading:

- Only standard devices with the following features are suitable for cascade:
  - Product name "C 2000/M 2000 extended version"
  - Serial number as from 0001 XXXX
  - Software version number on rating plate
- The maximum cable length between two cascade devices or between a cascade device and a standard device must not exceed 3 metres.
- Only SICK pre-assembled cables can be used for cascading. These cables must be ordered separately and are available in 0.25 m, 0.5 m, 1 m, 1.5 m, 2 m and 3 m lengths.
- For cascading of C 2000/M 2000, cables with M 12 plug /socket are used.

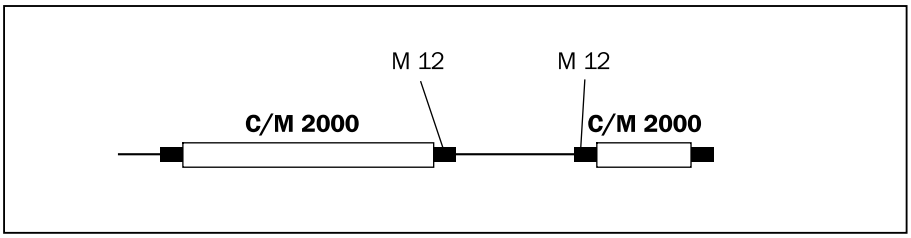

Fig. 3-8: Connectors for cascading of C 2000 and M 2000

- If an M 2000 device is operated in cascade, connection pin 6 of the host sender (HRANGE on connector M 12) must be wired depending on the required operating range to 0 V or 24 V. (see Table 5-2).
- The devices in a cascade work with the same beam coding, but do not interfere with each other.

Note If two independent cascade systems are mounted in the immediate vicinity of each other, it could be possible for the sender beam of cascade 1 to interfere with the receiver of cascade 2.

➢ In this case a barrier between the two cascade systems is recommended.

© SICK AG • Sicherheitstechnik • Germany • All rights reserved

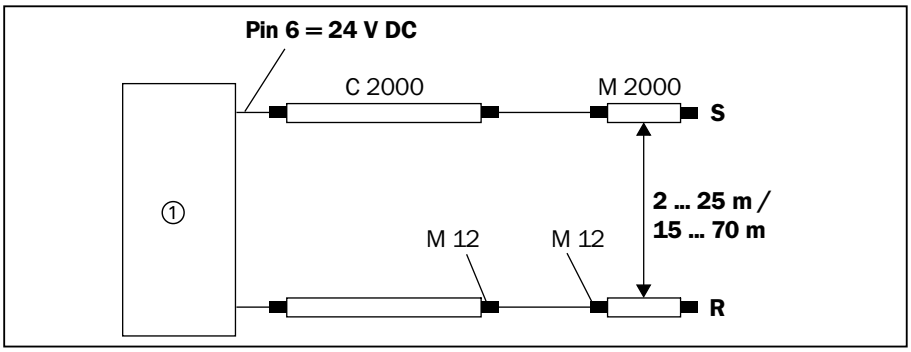

Fig. 3-9: When cascading C 2000 with M 2000, connect connection pin 6 (M 12 connector) of C2000 sender to 0 V or 24 V DC as appropriate.
(For operating range setting see *Table 5-2*)
① = Machine **S** = Sender **R** = Receiver

- When the cascade system is wired and switched on for the first time, each individual device stores the system parameters (number of devices in the system, number of beams of the individual devices) in its non-volatile memory. On each subsequent power-up each individual device assumes those parameters. If a device detects deviations from the original system parameters, the system switches off. The system only accepts an extension of the cascade by one additional pair of photoelectric switches. The system configuration can only be reset to its 'default' state by means of the reset procedure (see *section 3.5 Master reset procedure*) for each device.
- The cascade system may only be extended while the power is disconnected.
- The guest devices (G1 and G2) must be in their factory set 'default' state prior to initial switch-on of a cascaded system. If devices are removed from a system and used in other applications, each device must be reset to its 'default' state by means of the reset procedure (see *section 3.5 Master reset procedure*).

Note To prevent the devices from being incorrectly configured, they should not be switched on until they have been integrated into the cascade system as set out in the installation instructions.

Note Sender/receiver pairs with different resolutions and/or different numbers of light beams can be cascaded. However, the maximum number of light beams in the overall system must not exceed 180. The number of beams per sensor is specified in *chapter 9 Technical data*.

 © SICK AG • Sicherheitstechnik • Germany • All rights reserved

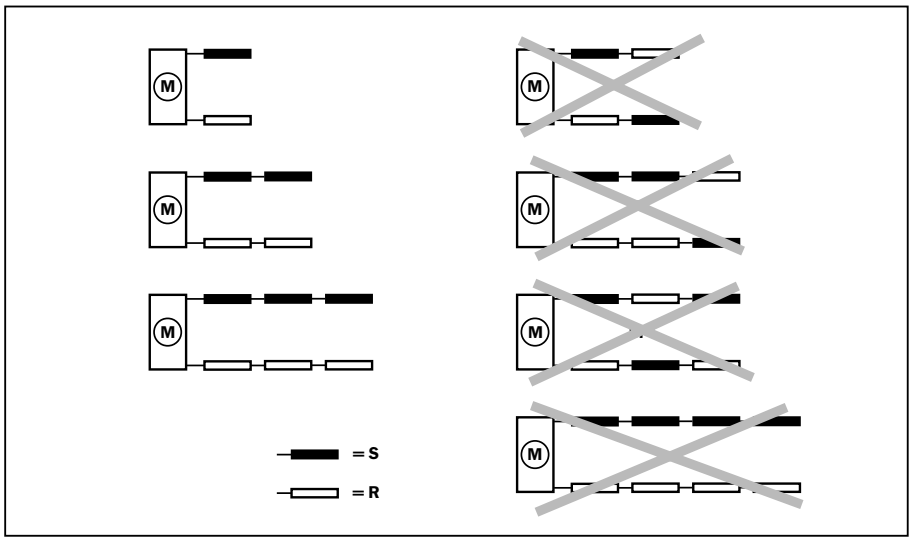

Fig. 3-10: Layout and numbers of cascade devices.
S = Sender **R** = Receiver **M** = Machine

Warning

Take care when planning the arrangement of devices in cascade!

In cascade, senders must always be connected to senders and receivers to receivers, in series (see *Fig. 6-1*). Senders and receivers must not mixed within a cascade.

Warning

Max. three sensor pairs in a cascade!

A maximum of three sender/receiver pairs are able to be connected in series in a cascade. If more devices are connected, the safety function of the photoelectric switches is no longer ensured.

3.3.3 Device test

Self-test

If 24 V is applied to the test input on the sender (see *section 5.4.1*), the sender is active. In order to utilize the self-test to reveal device errors, OSSD 1 and OSSD 2 must be connected separately to the machine control. The machine control must also evaluate both OSSD signals separately. In this case no external test (cyclic system test) is required. While the self-test routine is running, the protection offered by the photoelectric switch is maintained.

The self-test routine checks that the output levels of the two short-circuit-proof PNP semiconductor outputs are equal. During the power-on self-test the LEDs and the 7-segment displays on the sender and receiver show various status and diagnostic information.

© SICK AG • Sicherheitstechnik • Germany • All rights reserved

If a device failure occurs, the two outputs switch to the OFF state and so bringing the machine to a safe state before any injury to personnel can be caused. The self-test routine detects safety-related device errors within 3 seconds and then immediately stops the hazardous operation. The overall test time including testing of the internal data memory is 23 minutes.

Cyclic system test (external test)
If two-channel connection of the OSSDs is not possible, a cyclic system test (external test) must be performed (see *section 5.4.2*). For this procedure the machine's control system must generate a test signal and check the OSSD status, switching the sender off and back on again and checking the off/on response of the receiver in the process. Any errors must be detected by the control system. If the system test lasts longer than 150 ms, the restart interlock of the master controller test unit (RES) must be activated. If the duration of the system test is less than 150 ms, the restart interlock (RES) does not need to be activated.

In the operating mode with cyclic system test only one OSSD output needs to be connected.

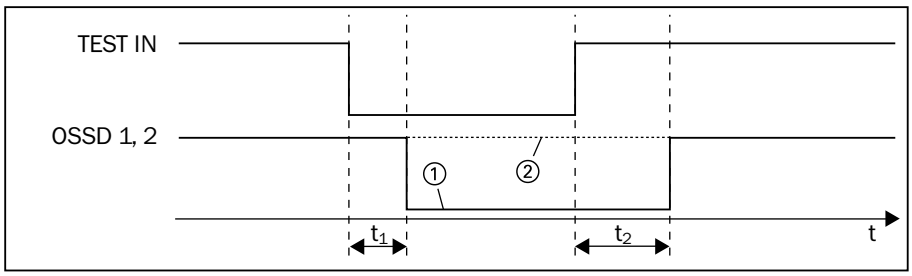

Fig. 3-11: Timing diagram of the cyclic system test in relation to switching outputs OSSD 1 and OSSD 2
① = Protective device OK ② = Device failure

Time parameter	Explanation
t_1 $t_{1, min}$ $t_{1, max}$	External Test active until OSSD inactive $t_L + 0,5 * t_R$ $t_L + t_R$
t_2 $t_{2, min}$ $t_{2, max}$	External test inactive until OSSD active $t_L + t_R$ $t_L + 1,5 * t_R$
t_R t_L	Sum total response times of the receivers involved (see rating plate) Length of the test signal on the sender 12 ms with 1 …60 beams in the host 20 ms with 61 …180 beams in the host

Table 3-2: Switching time intervals of the cyclic system test in relation to OSSDs

 © SICK AG • Sicherheitstechnik • Germany • All rights reserved

3.3.4 External device monitoring (EDM)

All versions of the C 2000 and M 2000 photoelectric switches have connection for external device monitoring (EDM). It checks that any connected switchgear (relays, contactors etc.) is operating correctly. (see *section 5.4.5*). To do this, the photoelectric switches monitor the feedback from the NC contact position on the EDM input.
The external device monitoring function is automatically activated when the receiver detects a signal changeover at its EDM input – connection pin 4 (M 12 connector) or connection pin 7 (Hirschmann connector) – before or after switching of the OSSD outputs. Once the external device monitoring function has been detected, it is stored in the non-volatile memory of the device. When the OSSD outputs are reactivated, indicated by the LEDs changing from red to green, the device then expects within 300 ms a corresponding signal changeover at the EDM input (OSSD = 24 V → EDM open, OSSD = 0 V → EDM = closed).

Note The external device monitor only permits the switching outputs to be activated when both externally connected switching devices (e.g. contactors) are at rest.

Note The external device monitoring function is maintained when the device is switched off and back on again. It can only be deactivated by the reset procedure (see *section 3.5*).

Note The external device monitor deactivates the OSSD outputs again if it detects no response from the switchgear 300 ms after activation of the OSSDs.

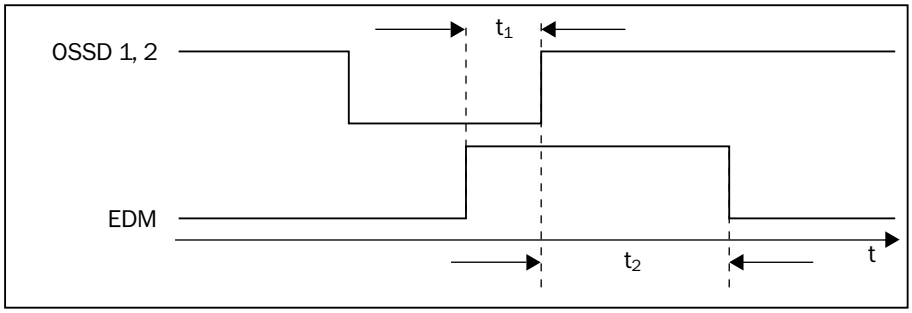

Fig. 3-12:Timing Diagram of external device monitoring in relation to switching outputs OSSD 1 and OSSD 2

Time parameter	Explanation
t_1 $t_{1,\,max}$	EDM active until OSSD 1 and OSSD 2 active 25 ms
t_2 $t_{2,\,max}$	OSSD 1 and OSSD 2 active until EDM inactive 300 ms

Table 3-3: Maximum limits of switching time intervals in external device monitoring

© SICK AG • Sicherheitstechnik • Germany • All rights reserved

3.3.5 Restart interlock (RES)

When at least one light beam is broken the machine stops and the restart interlock (RES) is activated. It ensures that the machine cannot restart until the light path is free and the Reset button has been pressed and released. The Reset button is connected locally by means of pre-assembled cable from SICK to the expansion socket of the receiver. Connection of the reset via the control cabinet is not necessary (see *section 5.4.6*).

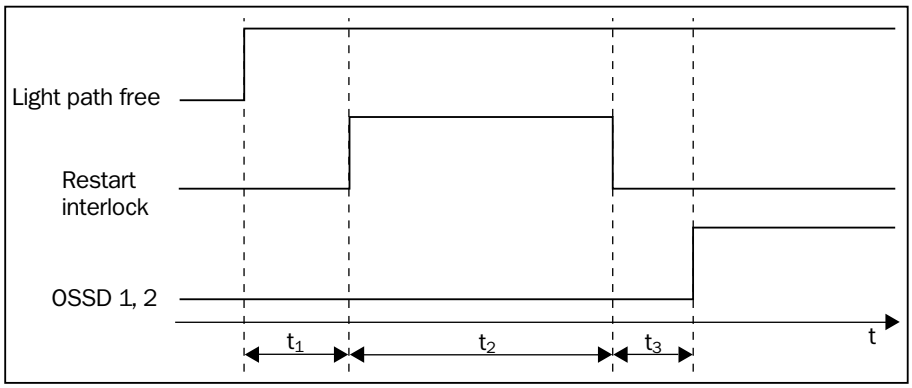

Fig. 3-13: Timing Diagram of restart interlock (RES) in relation to switching outputs OSSD 1 and OSSD 2

Time parameter	Explanation
t_1 $t_{1, typ}$ $t_{1, max}$	Time period between light path broken and detection: Restart interlock active after 150 ms dependent on synchronization; enable restart if yellow LED on C 2000/M 2000 receiver flashing
t_2 $t_{2, min}$	Pulse width for Reset 50 ms
t_3 $t_{3, min}$	Reset inactive until OSSD 1 and OSSD 2 active 50 ms

Table 3-4: Switching time periods of restart interlock (RES) in relation to OSSDs

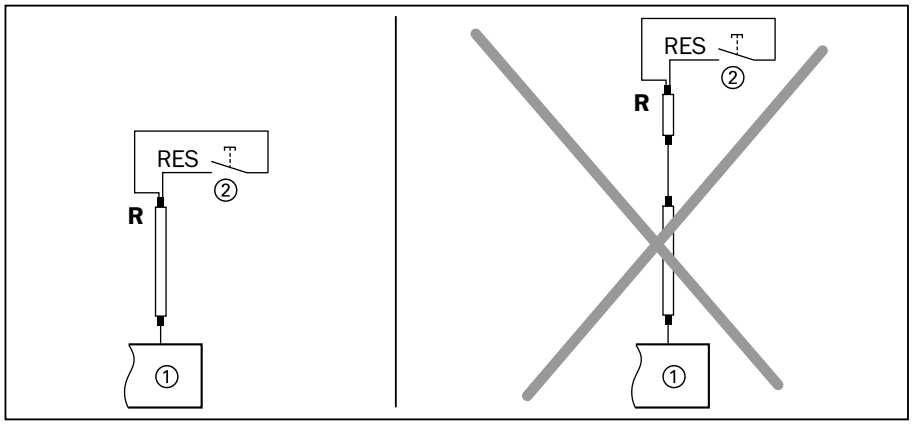

Fig. 3-14: RES in cascade not possible
R = Receiver ① = Machine ② = Reset button

 © SICK AG • Sicherheitstechnik • Germany • All rights reserved

The Reset button must be pressed after switching on the device.

Note The restart interlock (RES) cannot be activated in a cascade. To implement this function we recommend using the safety evaluation unit LE 20.

3.3.6 OSSD switch outputs

The two OSSD switch outputs are PNP semiconductor outputs with active discharge circuits. They are short-circuit-proof to 24 V DC and 0 V. When the light path is unbroken the signal level of the outputs is approx. 24 V DC (non-floating). When the light beam is broken the signal level is 0 V. To detect device failures the switch outputs OSSD 1 and OSSD 2 are subject to a self-test. *Fig. 3-15* and *Table 3-4* describe the time response of the switch outputs in relation to the corresponding test pulses. (For more information on the device test refer to *section 3.3.3* and *sections 5.4.1* and *5.4.2*). The devices reliably identify a possible short-circuit between OSSD 1 and OSSD 2 (detection of crossed connections) if the cable resistance is below 4 Ohms. Error codes are displayed on the 7-segment display (see *chapter 7 Troubleshooting*).

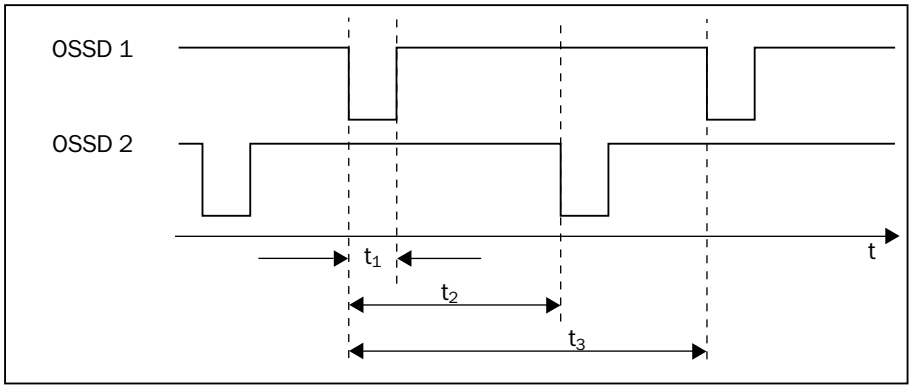

Fig. 3-15: Timing Diagram of switch outputs OSSD 1 and OSSD 2 in relation to each other

Time parameter	Explanation
t_1 $t_{1, min}$ $t_{1, max}$	Width of a test pulse 240 µs 296 µs
t_2 $t_{2, min}$ $t_{2, max}$	Time offset between test pulses at OSSD 1 and OSSD 2 2.5 ms 33.8 ms
t_3 $t_{3, min}$ $t_{3, max}$	Repetition rate of test pulses of the OSSD's 19.7 ms 36.3 ms

Table 3-5: Switching time periods of test pulses at OSSD 1 and OSSD 2

© SICK AG • Sicherheitstechnik • Germany • All rights reserved

3.4 Display Elements

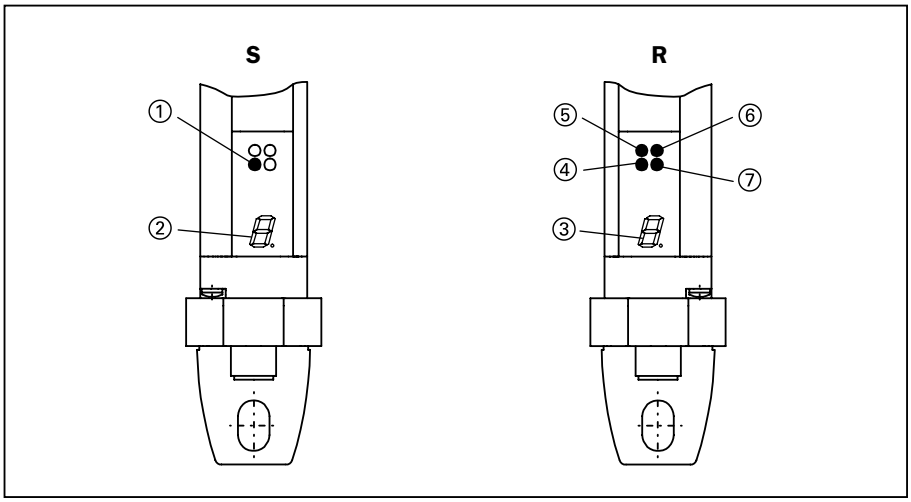

Fig. 3-16: Display elements of C 2000, M 2000 and M 2000-A/P
S = Sender
R = Receiver or M 2000-A/P
① = LED yellow
② = 7-segment display, sender
③ = 7-segment display, receiver
④ = LED yellow
⑤ =LED amber
⑥ = LED red
⑦ = LED green

The C 2000, M 2000 and M 2000-A/P devices have the following display elements:

Sender

Displays	Function
LED yellow	Operating voltage on
7-segment display	Display of fault and start-up codes

Table 3-6: Display elements of the sender

Receiver

Displays	Function
LED green	Switch outputs on
LED red	Switch outputs off
LED amber	Contamination
LED yellow	Reset input required
7-segment display	Display of fault and start-up codes

Table 3-7: Display elements of the receiver

 © SICK AG • Sicherheitstechnik • Germany • All rights reserved

After power-up, the 7-segment display shows the configured coding and the transmission power (M 2000 only) for approx. one second.
The details of the start-up codes are explained in *section 6.2 Alignment of the light beam* and those of the error codes in *chapter 7 Trouble-shooting*.

3.5 Master reset procedure

In order to avoid any risk of system manipulation, configuration information (EDM, cascading) are stored in a non-volatile memory in each device. The master reset procedure resets this device information to the factory default state.

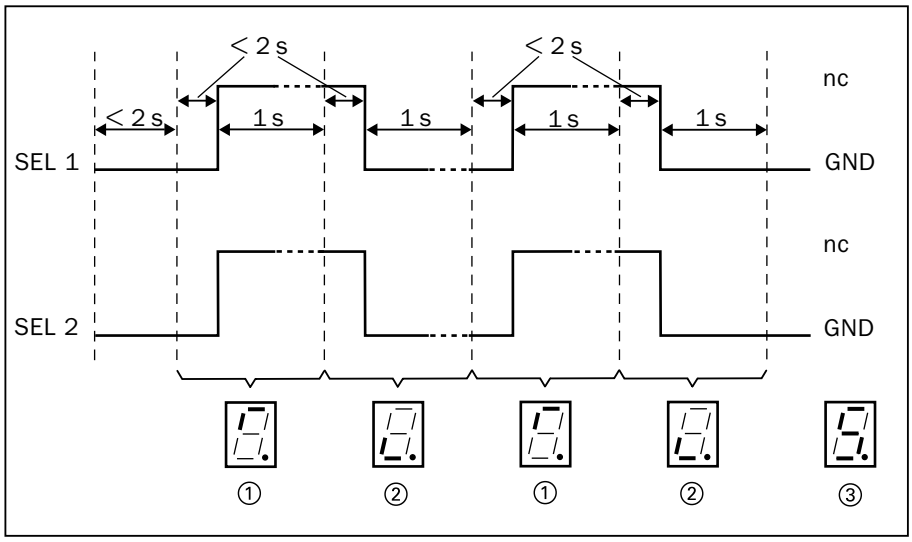

Fig. 3-17: Reset to factory default state
① = Prompt to open contact ② = Prompt to close contact
③ = Master reset procedure successful

The master reset procedure requires that before power is applied SEL 1 and SEL 2 are connected to GND. After power-up they must be connected for two seconds, the 7-segment display will indicate ①. Within two seconds the SEL inputs must be removed from their GND connection. Display ② then requires the connection to be closed again. These two steps must be carried out twice before the reset procedure has been completed successfully, at this point the display will indicate "5".
In the event of an error during the reset procedure the display shows the following error messages (see also *chapter 7 Troubleshooting*):

Display	Explanation
L.1.	SEL 1 / SEL 2 open too long
L.6.	GND open too long

Table 3-8: Error messages during the master reset procedure

© SICK AG • Sicherheitstechnik • Germany • All rights reserved

Note The device should only be switched on when it has been integrated into its final and complete application set-up, as detailed in the installation instructions, failure to do so could result in the device being wrongly configured.

Note If a cascade system is to be reset, the reset procedure must be carried out separately for each device in the cascade system (see s*ection 3.3.2 Cascading*).

Note M 2000-A/P (all versions) cannot be reset (relates only to the EDM function).
Remedy: Reset by SICK Service or return to factory.
On-site remedy: Wire EDM as described in section 5.4.5.

Warning

Master reset procedure

After a reset procedure the functioning of the system must be checked. The SEL 1 and SEL 2 wire must be rewired or isolated.

3.6 Determining the safety distance

Between the protective field of C 2000,M 2000, M 2000-A/P and the danger zone a safety distance must be maintained. The aim of the safety distance is to ensure that the danger zone can only be reached when the hazardous movement of the machine or plant has stopped. The safety distance (in accordance with EN 999 and EN 294) depends on the following factors:

- Run-on time of the machine or plant
  (The run-on time must be determined by measurement)
- Response time of the complete protective system, e.g. machine control with C 2000 (For response times see *chapter 9 Technical data*)
- Hand or approach speed
- Resolution of the light curtain or beam gap

 © SICK AG • Sicherheitstechnik • Germany • All rights reserved

3.6.1 Calculation of the safety distance, C 2000

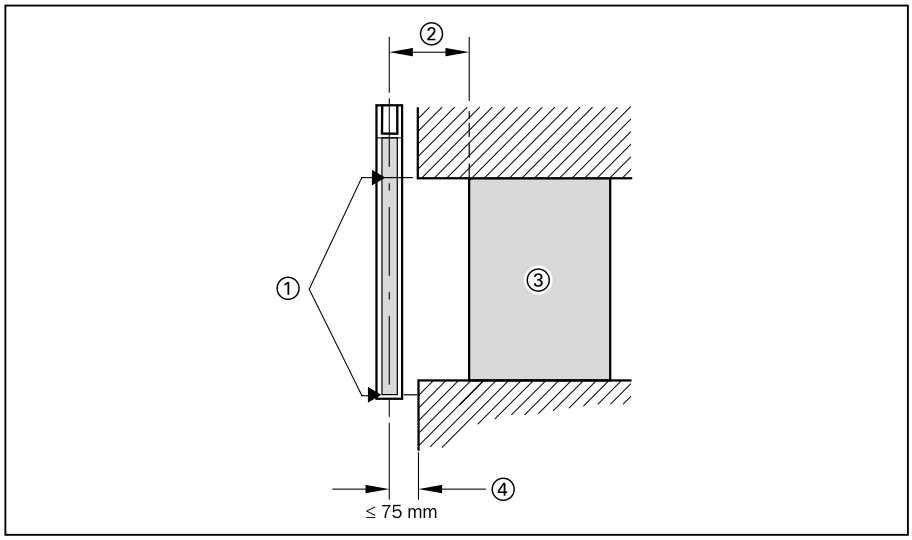

Fig. 3-18: C 2000, safety distance to danger zone
① = Protective field height ③ = Danger zone
② = Safety distance ④ = Max. distance to prevent access behind guard

For the C 2000 safety light curtain the safety distance is calculated as follows:

S = 100 ... 500 mm: $S = 2000 \cdot T + 8 \cdot (d - 14)$ [mm]
S > 500 mm: $S = 1600 \cdot T + 8 \cdot (d - 14)$ [mm]
T = Run-on time of machine + response time of protective system [s]
d = Resolution of light curtain [mm]
S = Safety distance [mm]

Example for calculation of the safety distance, C 2000

A machine is to be protected with the C 2000 safety light curtain. The run-on time of the machine is 50 ms, the response time of the overall electrical safety system including C 2000 is 15 ms. What safety distances are required for guard resolutions of 20 mm and 30 mm respectively?

$S = 2000 \cdot T + 8 \cdot (d - 14)$ [mm], T = 50 ms + 15 ms = 65 ms

Resolution 20 mm: $S = 2000 \cdot 0.065 + 8 \cdot (20 - 14) = 178$ mm

Resolution 30 mm: $S = 2000 \cdot 0.065 + 8 \cdot (30 - 14) = 258$ mm

© SICK AG • Sicherheitstechnik • Germany • All rights reserved

3.6.2 Calculation of the safety distance, M 2000, M 2000-A/ P and testable single beam safety photoelectric switches

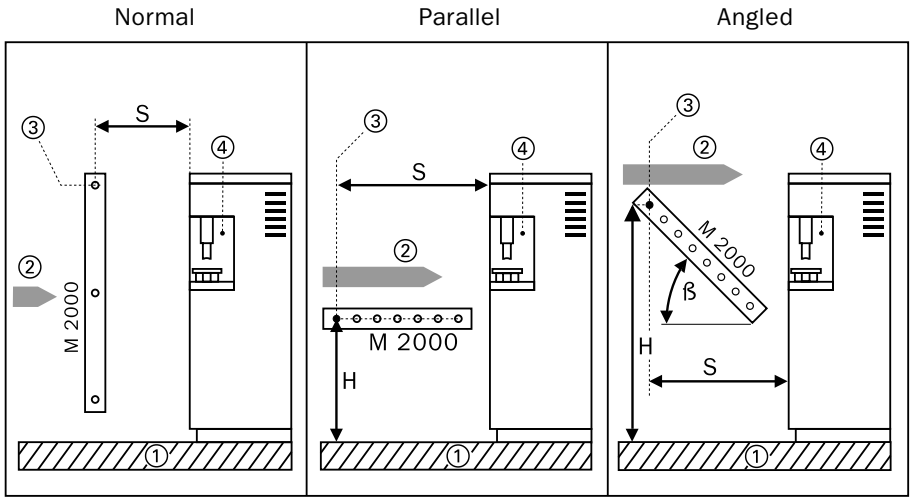

Fig.3-19: Approach to danger zone
① = Floor ③ = Limit of protective field
② = Approach direction ④ = Danger zone

For the M 2000 multi-beam photoelectric safety switch the safety distance is calculated as follows:

Approach direction, normal, resolution > 70 mm

Multi-beam: S = 1600·T + 850 [mm]
70 mm, single-beam: S = 1600·T + 1200 [mm]

See Table 3-7 for quantity and recommended heights of beams to EN 999.

Number of beams	Heights above reference plane, e.g. floor, in mm	Beam gap in mm
1	750	--
2	400, 900	500
3	300, 700, 1100	400
4	300, 600, 900, 1200	300

Table 3-9: Number of beams, height above reference plane and beam gap for M 2000 and single beam photoelectric safety switches

 © SICK AG • Sicherheitstechnik • Germany • All rights reserved

Approach direction, parallel

$S = 1600 \cdot T + (1200 - 0.4H)$ [mm]
If $H \geq 300$ mm there is risk of undetected access below the beam.
The condition $1200 - 0.4 \cdot H > 850$ mm must therefore be met. The max. permissible height is calculated as follows: $H \geq 15 \cdot d - 50$)
Therefore: beam resolution: $d \leq H/15 + 50$

T = Run-on time of machine + response time of protective device [s]
H = Height of protective field above reference plane,e.g. floor [mm]
d = Resolution of photoelectric switch [mm]
= Beam gap + beam cross-section

Warning

Height of protected field H < 1000 mm !

The height H of the protective field must not be more than 1000 mm.

S applies to the most distant beam, whose height is < 1000 mm.

Approach direction, angled

$\beta > 30°$, calculate as normal approach
$\beta < 30°$, calculate as parallel approach

Example for calculation of the safety clearance, M 2000, parallel and normal approach
The area around a machine is to be protected with the M 2000 multi-beam photoelectric safety switch. The run-on time of the machine is 50 ms, the response time of the overall electrical safety system including M 2000 is 15 ms.

a) What safety distance S is required for normal and parallel direction of approach? With a parallel approach the height H = 300 mm.

Normal: $T = 50 \text{ ms} + 15 \text{ ms} = 65 \text{ ms}$
S = $1600 \cdot T + 850 = 1600 \cdot 0.065s + 850 =$ **954 mm**

Parallel: $H = 300$ mm
The condition $1200 - 0.4 \cdot H > 850$ mm is met,
$1200 - 0.4 \cdot 300 = 1080$ mm
$S = 1600 \cdot T + (1200 - 0.4H)$
S $= 1600 \cdot 0.065 + (1200 - 0.4 \cdot 300) =$ **1184 mm**

© SICK AG • Sicherheitstechnik • Germany • All rights reserved

b) With a parallel approach the light beams are to be installed 300 mm above the floor level. What minimum resolution must the photoelectric switch have?

H = 300 mm, d ≤ H/15 + 50, **d** = 300/15 + 50 mm = **70 mm**

c) For a parallel approach, guards with a resolution of 116 mm are to be used. At what height above the floor level must this device be installed?

d = 116 mm, H ≥ 15·(d – 50), **H** = 15·(116 – 50) = **990 mm**

Minimum clearance to reflective surfaces

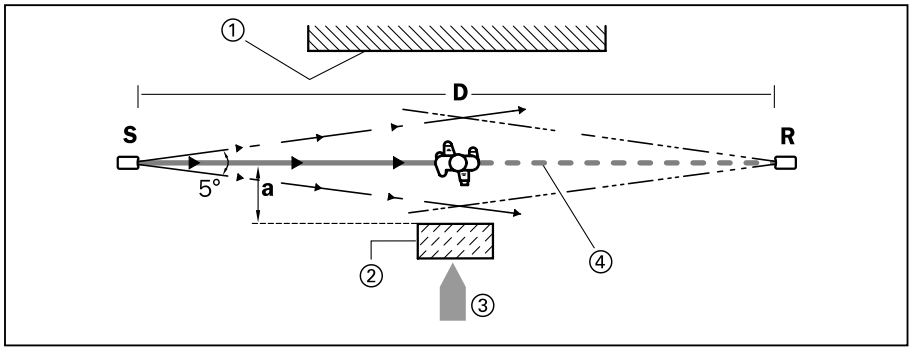

Fig. 3-20: Minimum clearance to reflective surface, correct mounting and alignment

① = Border of danger zone
② = Reflective surface
③ = Direction of approach
④ = Light beam interrupted
D = Distance between sender and receiver
S = Sender
R = Receiver
a = Minimum clearance from reflective surface to beam axis

Reflective surfaces within the transmission and reception path may lead to reflections and beam deflections, this can result in failure to detect penetrating objects. Consequently, a minimum clearance (a) from reflective surfaces to the optical axis between the sender and receiver must be maintained. The distance (a) depends on the distance between the sender and receiver.

 © SICK AG • Sicherheitstechnik • Germany • All rights reserved

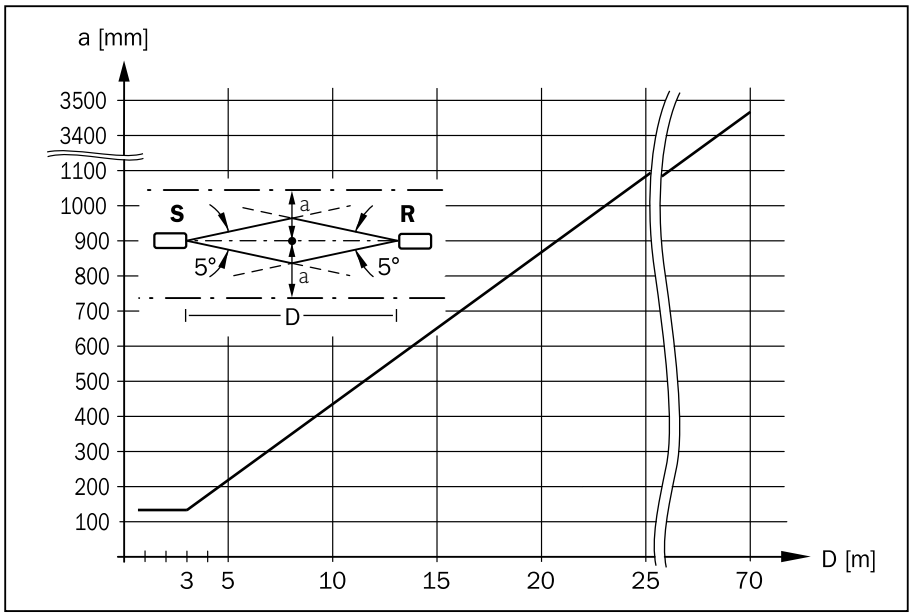

Fig. 3-21: C 2000/M 2000, clearance (a) as a function of distance D between sender and receiver
S=Sender **R**=Receiver

3.7 Application examples

3.7.1 Using C 2000 as a light guard

The C 2000 safety light curtain protects against intrusion in and access to danger areas.

Typical applications for Type 2 light guards are to be found in:

- packaging machinery
- textile machinery
- "pick and place" machinery in the electronics industry
- warehousing and materials handling
- woodworking machinery industry

 © SICK AG • Sicherheitstechnik • Germany • All rights reserved

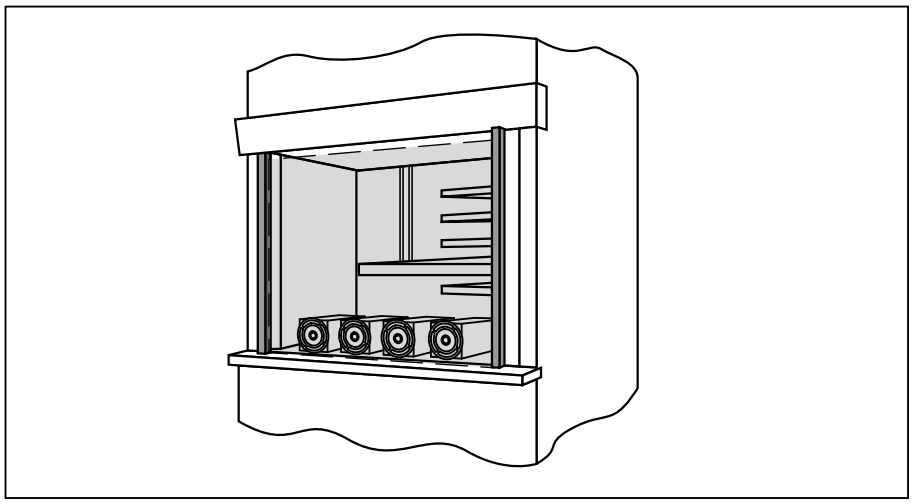

Fig. 3-22: Protection against intrusion with C 2000

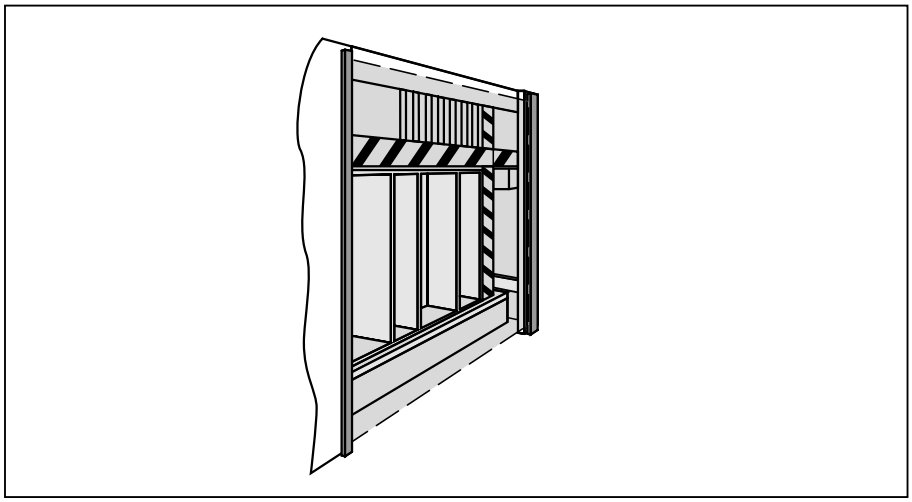

Fig. 3-23: Danger zone protection with C 2000

3.7.2 Using M 2000 as a light guard

The M 2000 multi-beam photoelectric safety switch protects danger areas and access to them. Typical applications are to be found in:

- robot systems
- palletising systems
- stacking systems
- warehousing and materials handling
- assembly lines
- bottling plants
- woodworking industry
- quarrying industry
- packaging industry
- transfer zones

 © SICK AG • Sicherheitstechnik • Germany • All rights reserved

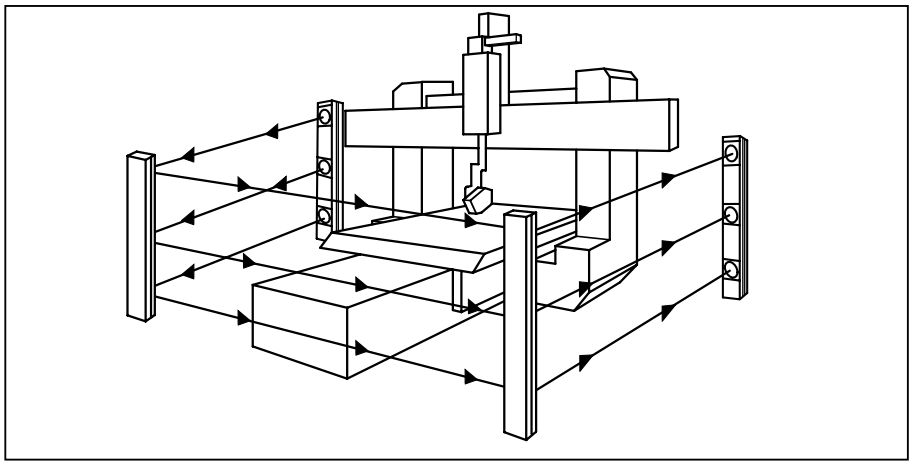

Fig. 3-24: Access protection with M 2000 and corner mirrors

4 Installation

Warning

Determine safety distance before carrying out any installation work!

Before the C 2000, M 2000 and M 2000-A/P devices can be mounted the necessary safety distance must be determined as set out in *section 3.6.*

Warning

Ensure correct alignment!

After correct mounting, the labels will be displayed on the same sides and at the same heights.

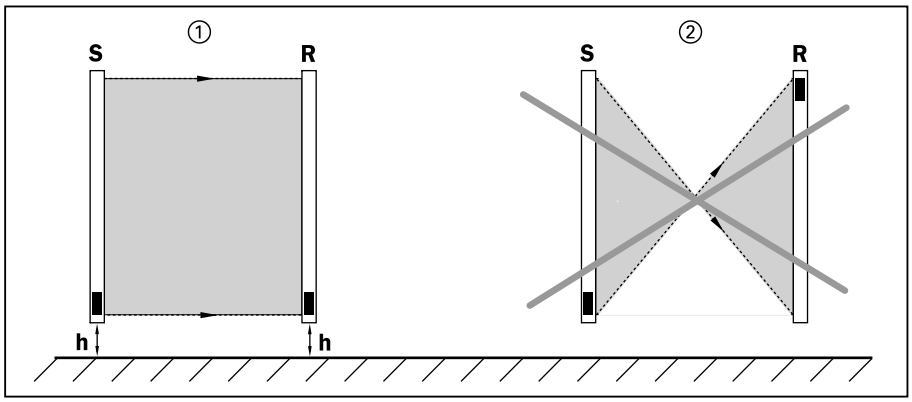

Fig. 4-1: Mounting orientation of C 2000 and M 2000
① = Correct ② = Incorrect **S** = Sender **R** = Receiver **h** = Height

© SICK AG • Sicherheitstechnik • Germany • All rights reserved

There are two possible ways of securing the devices:

4.1 Installation using swivel-mount bracket

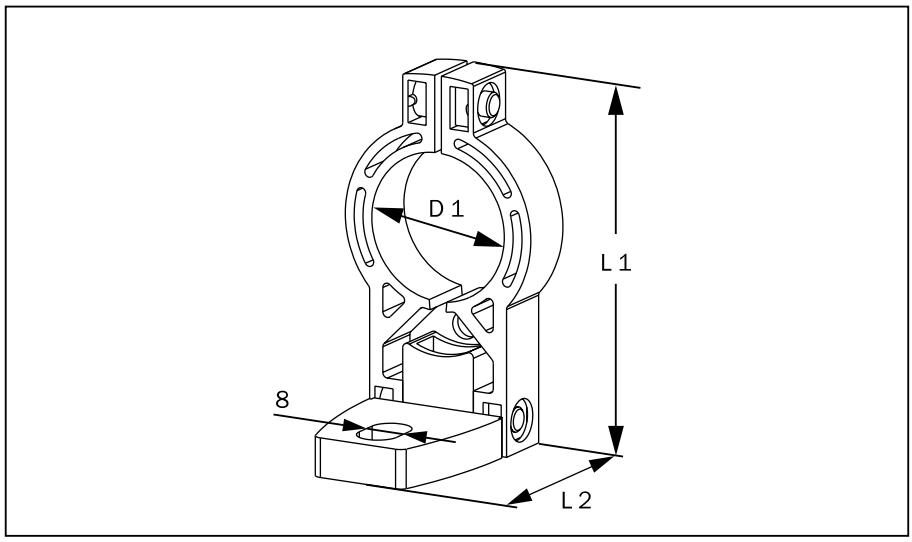

Fig. 4-2: Dimensional drawing, swivel-mount bracket for C 2000, M 2000 and M 2000-A/P

Dimension	Housing, small [mm]	Housing, large [mm]
L 1	62	75
L 2	44	44
D 1	24	30

Table 4-1: Dimensions for swivel-mount brackets

Note For more dimensions for the C 2000 and M 2000 devices refer to *section 11.2 Diagrams and tables.*

 © SICK AG • Sicherheitstechnik • Germany • All rights reserved

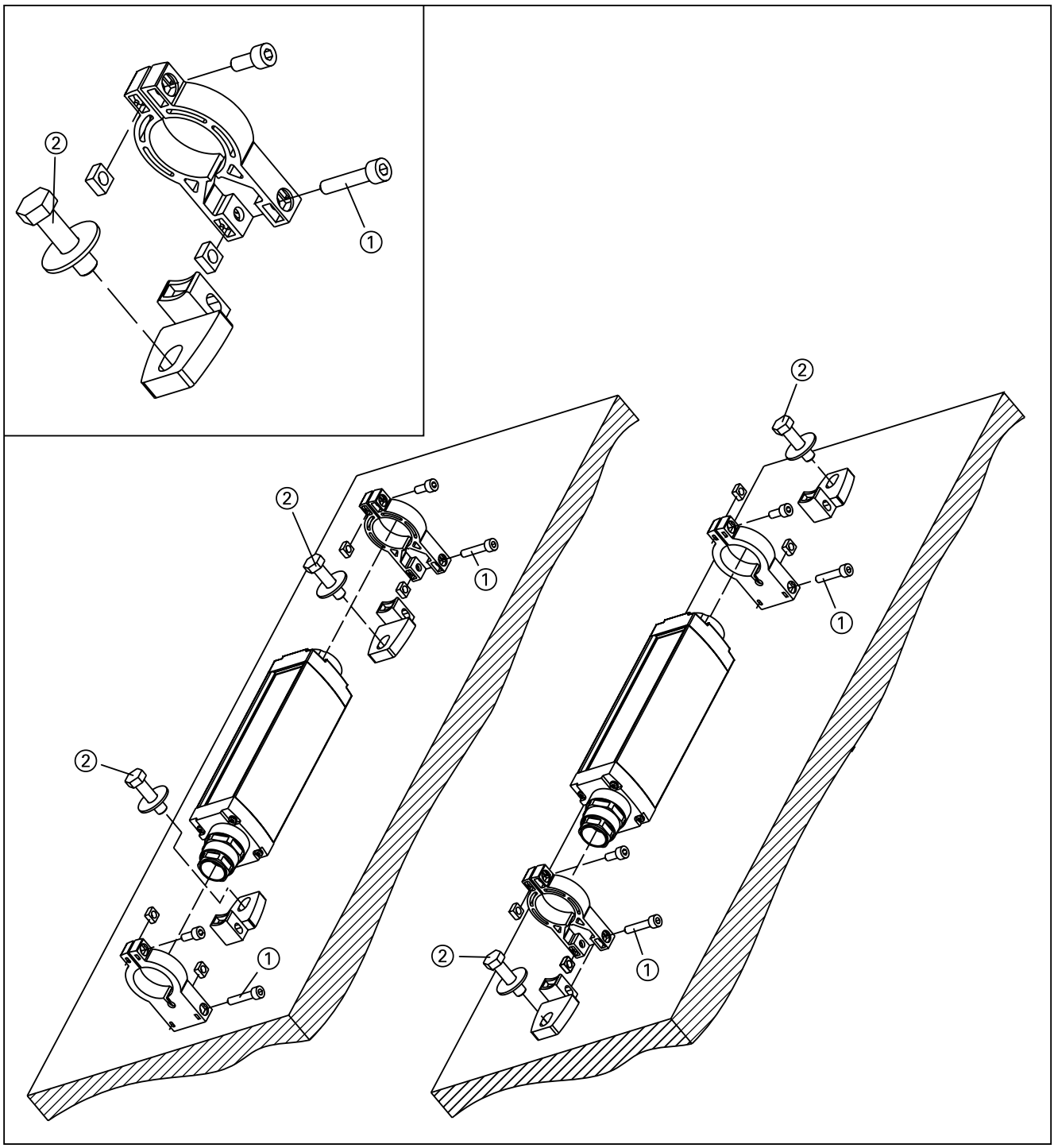

Fig. 4-3: Mounting of C 2000, M 2000 and M 2000-A/P with swivel-mount bracket
② = M 8 fixing screw, not supplied

Note The two screws ① should be mounted facing the operator side so they remain accessible after assembly.

 © SICK AG • Sicherheitstechnik • Germany • All rights reserved

4.2 Installation using side-mount bracket

The sender and receiver of each device type can be mounted by two side-mount brackets.

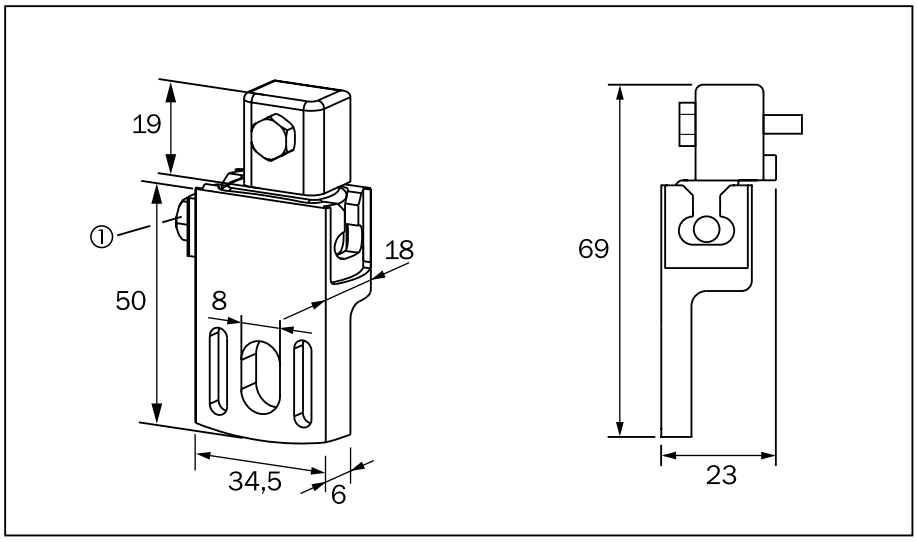

Fig. 4-4: Side bracket for C 2000, M 2000 and M 2000-A/P
① = Clamping screw

Note The side bracket is mounted using the supplied sliding nuts. It must be ensured that the clamping screws remain accessible. With these screws the safety switches can subsequently be adjusted and locked in their correct position.

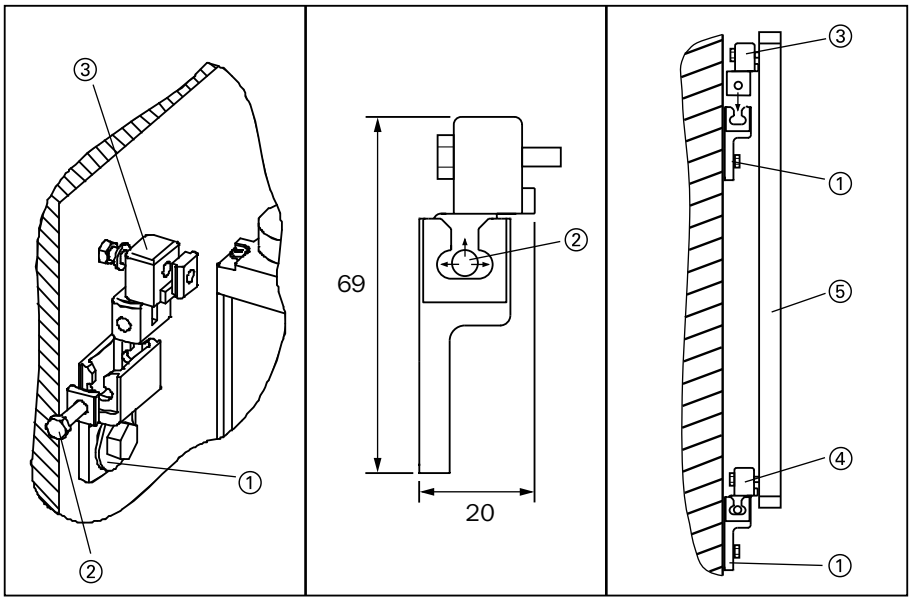

Fig. 4-5: Side bracket for C 2000, M 2000 and M 2000-A/P
① = Wall mounting
② = Clamping screw (adjuster)
③ = Side bracket, not mounted
④ = Side bracket, mounted
⑤ = C 2000, M 2000, M 2000-A/P

 © SICK AG • Sicherheitstechnik • Germany • All rights reserved

ACHTUNG
Warning

Protect photoelectric devices against accidental misalignment!

Any mounted photoelectric devices should be secured to prevent any risk of accidental misalignment, the sliding nuts for the side brackets should be fixed at the start and end of the mounting channel. Alternatively, additional components can be mounted in order to remove the risk of the photoelectric devices becoming misaligned.

Recommendation

When aligning systems with large distances between sender and receiver or with corner mirrors, we recommend using the laser alignment aid AR 60 (see *section 11.1*).

5 Electrical Installation

In order to guarantee full EMC compliance, the system earth must be connected.

The interference emission of the C 2000 and M 2000 in non-cascade conforms to the requirements of EN 50081-1. In cascade it conforms to EN 50081-2. This means that a cascaded system may cause radio interference in some residential applications. In such cases, the operating company may demand that appropriate countermeasures be put in place.

© SICK AG • Sicherheitstechnik • Germany • All rights reserved

5.1 Electrical connections, Hirschmann connector

5.1.1 6-pin + shield, (large housing only) Standard version

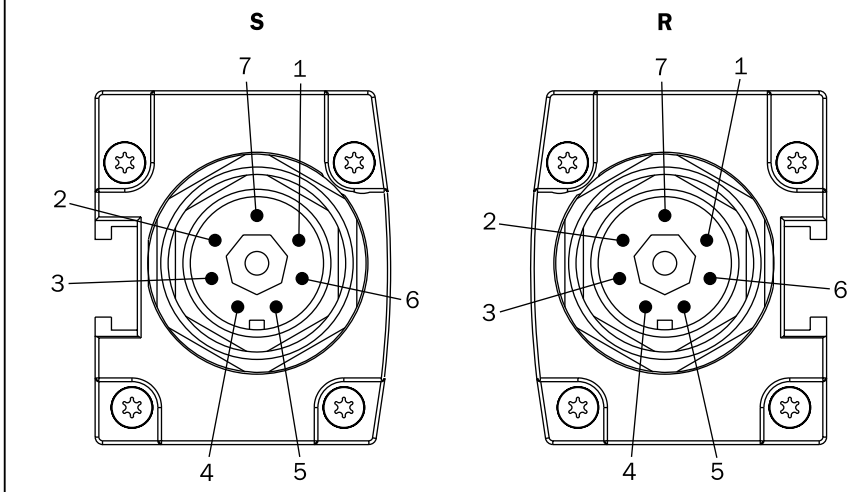

S = Sender		
Pin no.	**Designation**	**Function** (I = input, O = output)
1	+24 V DC	Power supply connection (+24VDC), U_B
2	GND	Power supply connection (0 V)
3	TEST	I: Device self-test 0 V = Sender inactive 24 V = Sender active
4	HRANGE	I: Sender operating range (only effective for M 2000) 0 V = 0 ... 6 m or 0 ... 20 m 24 V = 2 ... 25 m or 15 ... 70 m
5	SEL 1	I: Beam coding (see *Table 5-1*)
6	SEL 2	I: Beam coding (see *Table 5-1*)
7	Shield	System earth
R = Receiver		
1	+24 V DC	Power supply connection (+24VDC), U_B
2	GND	Power supply connection (0 V)
3	OSSD 1	O: Switching output 1
4	OSSD 2	O: Switching output 2
5	SEL 1	I: Beam coding (see *Table 5-1*)
6	SEL 2	I: Beam coding (see *Table 5-1*)
7	Shield	System earth

Fig. 5-1: Connection diagram for C 2000, M 2000, (Standard versions)

 © SICK AG • Sicherheitstechnik • Germany • All rights reserved

5.1.2 6/11-pin + shield, RES, Cascade version

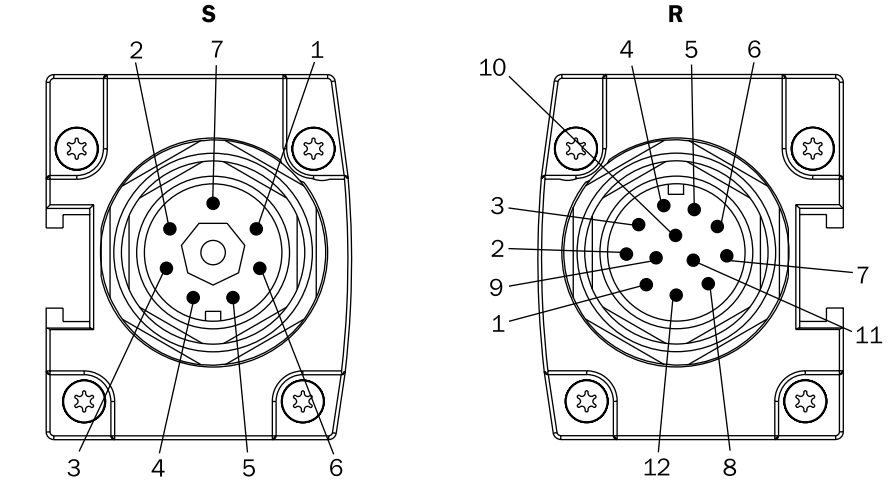

S = Sender		
Pin no.	**Designation**	**Function** (I = input, O = output)
1	+24 V DC	Power supply connection (+24VDC), U_B
2	GND	Power supply connection (0 V)
3	TEST	I: Device self-test 0 V = Sender inactive
4	HRANGE	Sender operating range (effective for M 2000 only) 0 V = 0 ... 6 m or 0 ... 20 m
5	SEL 1	I: Beam coding (see *Table 5-1*)
6	SEL 2	I: Beam coding (see *Table 5-1*)
7	Shield	System earth
R = Receiver		
1	+24 V DC	Power supply connection (+24VDC), U_B
2	GND	Power supply connection (0 V)
3	OSSD 1	O: Switching output 1
4	OSSD 2	O: Switching output 2
5	SEL 1	I: Beam coding (see *Table 5-1*)
6	SEL 2	I: Beam coding (see *Table 5-1*)
7	EDM	I: External device monitoring, connection of 24 V via series connection of NC contacts of the
8 ... 11	nc	No Function
12	Shield	System earth

Fig. 5-2: Connection diagram for C 2000, M 2000, (RES, Cascade versions),

© SICK AG • Sicherheitstechnik • Germany • All rights reserved

5.1.3 11-pin + shield, M 2000-A/P version

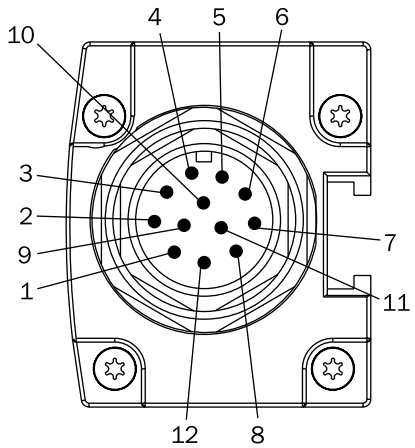

	Designation	Function (I = input, O = output)
1	+24 V DC	Power supply connection (+24VDC), U_B
2	GND	Power supply connection (0 V)
3	OSSD 1	O: Switching output 1
4	OSSD 2	O: Switching output 2
5, 6	nc	No Function
7	EDM	I: External device monitoring, connection of 24 V via series connection of NC contacts of the machine contactors
8 ... 10	nc	No Function
11	TEST	I: Device self-test 0 V = Sender inactive 24 V = Sender active
12	Shield	System earth

Fig. 5-3: Sender/receiver, M 2000-A/P, nc = no connection

 © SICK AG • Sicherheitstechnik • Germany • All rights reserved

5.2 Electrical connections, M 12 connector

5.2.1 Standard, RES and Cascade versions

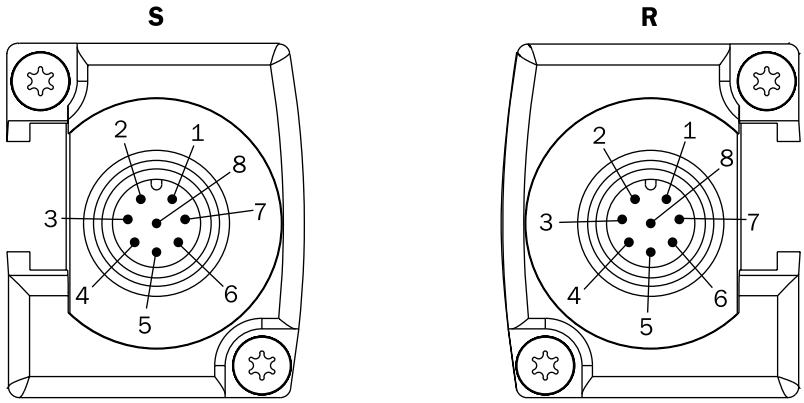

S = Sender			
Pin no.	**Colour**	**Designation**	**Function** (I = input, O = output)
1	White	SEL 1	I: Beam coding (see *Table 5-1*)
2	Brown	+ 24 V DC	Power supply connection (+24VDC), U_B
3	Green	SEL 2	I: Beam coding (see *Table 5-1*)
4	Yellow	nc	No Function
5	Grey	TEST	I: Device self-test 0 V = Sender inactive 24 V = Sender active
6	Pink	HRANGE	I: Sender operating range (M 2000 only) 0 V = 0 ... 6 m or 0 ... 20 m 24 V = 2 ... 25 m or 15 ... 70 m
7	Blue	GND	Power supply connection (0 V)
8		Shield	System earth
R = Receiver			
1	White	SEL 1	I: Beam coding (see *Table 5-1*)
2	Brown	+ 24 V DC	Power supply connection (+24VDC), U_B
3	Green	SEL 2	I: Beam coding (see *Table 5-1*)
4	Yellow	EDM	I: External device monitoring, connection of 24 V via series connection of NC contacts of the machine contactors
5	Grey	OSSD 1	O: Switching output 1
6	Pink	OSSD 2	O: Switching output 2
7	Blue	GND	Power supply connection (0 V)
7		Shield	System earth

Fig. 5-4: Connection diagram for C 2000, M 2000, (Standard, RES, Cascade versions), nc = no connection

© SICK AG • Sicherheitstechnik • Germany • All rights reserved

5.2.1 M 2000-A/P version

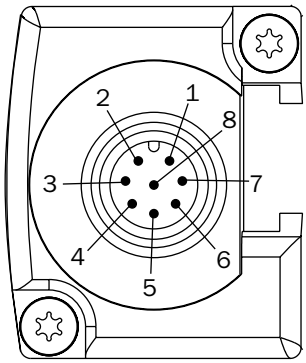

Pin no.	Colour	Designation	Function (I = input, O = output)
1	White	TEST	I: Device self-test 0 V = Sender inactive 24 V = Sender active
2	Brown	+ 24 V DC	Power supply connection (+24VDC), U_B
3	Green	nc	No Function
4	Yellow	EDM	I: External device monitoring, connection of 24 V via series connection of NC contacts of the machine contactors
5	Grey	OSSD 1	O: Switching output 1
6	Pink	OSSD 2	O: Switching output 2
7	Blue	GND	Power supply connection (0 V)
8		Shield	System earth

Fig. 5-5: Connection diagram, M 2000-A/P, nc = no connection

 © SICK AG • Sicherheitstechnik • Germany • All rights reserved

5.3 Electrical connections, RES connector

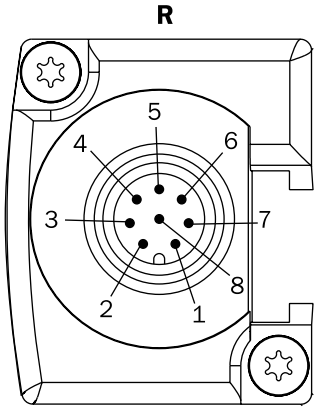

R = Receiver

Pin no.	**Colour**	**Designation**	**Function** (I = input, O = output)
1	White		Internal use
2	Brown	+ 24 V DC	O: Output voltage for Reset button
3	Green		Internal use
4	Yellow	nc	No Function
5	Grey	RES SEL	I: GND = Reset deactivated nc = Reset activated
6	Pink	RES	I: Restart interlock, connection for the NO contact of Reset button
7	Blue	GND	0 V
8			Internal use

Fig. 5-6: Connection diagram of expansion socket, C 2000, M 2000 and M 2000-A/P, (RES version), nc = no connection

© SICK AG • Sicherheitstechnik • Germany • All rights reserved

5.4 Connection Diagrams

5.4.1 Configuration for device self-test

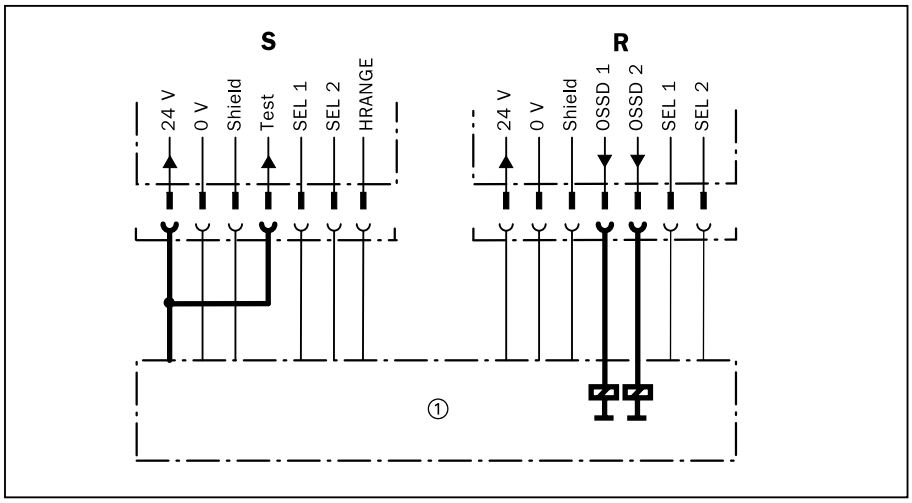

Fig. 5-7: Connection of OSSD outputs for device self-test
S = Sender **R** = Receiver ① = Machine

Explanation Device self-test is active when the test input (Test) of the sender is connected to 24 V. The receiver continuously checks that the signals of switching outputs OSSD 1 and OSSD are identical.

Warning

Connect OSSD 1 and OSSD 2 separately!

For the device self-test function, **both** OSSD outputs must be connected! To ensure signal safety, OSSD 1 and OSSD 2 must be connected separately to the machine control, which must process each signal separately. OSSD 1 and OSSD 2 must not be interconnected.

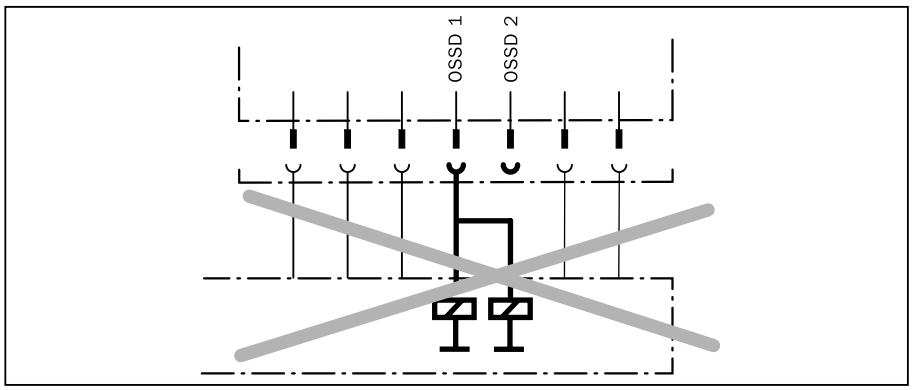

Fig. 5-8: Never interconnect OSSD outputs (= single-channel)!

 © SICK AG • Sicherheitstechnik • Germany • All rights reserved

The two outputs are short-circuit-proof against 24 V DC and 0 V. When the light path is uninterrupted the signal level of the outputs will be 24 VDC (non-floating). When the light beam is interrupted and in cases of device failure the signal level is 0 V.

5.4.2 Configuration of cyclic system test (external test)

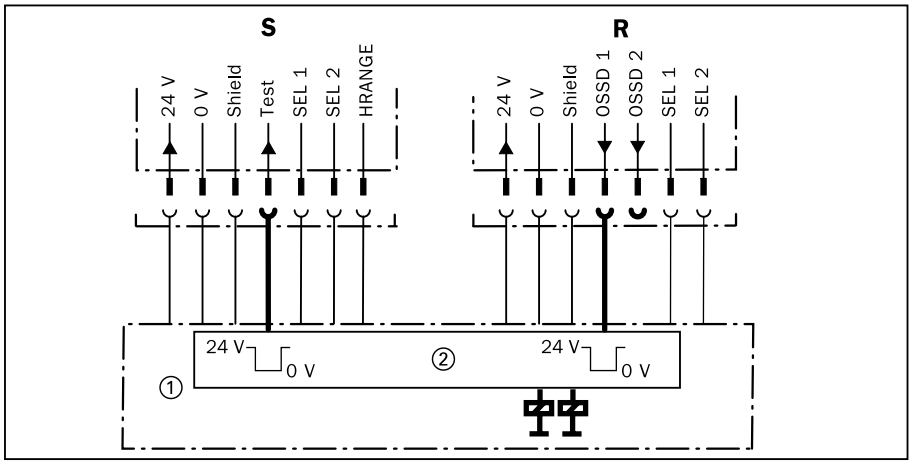

Fig. 5-9: Configuration of the cyclic system test (external test), connection of the test input and the OSSD outputs
S = Sender ① = Machine
R = Receiver ② = Test pulse generation and evaluation

Explanation When configured for cyclic system testing (external test), only OSSD 1 needs to be connected. *Section 3.3.3* provides a description of the cyclic system test.

Note Ensure the test integration follows IEC 61496-1 (A2) when using cyclic system test.

© SICK AG • Sicherheitstechnik • Germany • All rights reserved

5.4.3 Configuration of beam coding

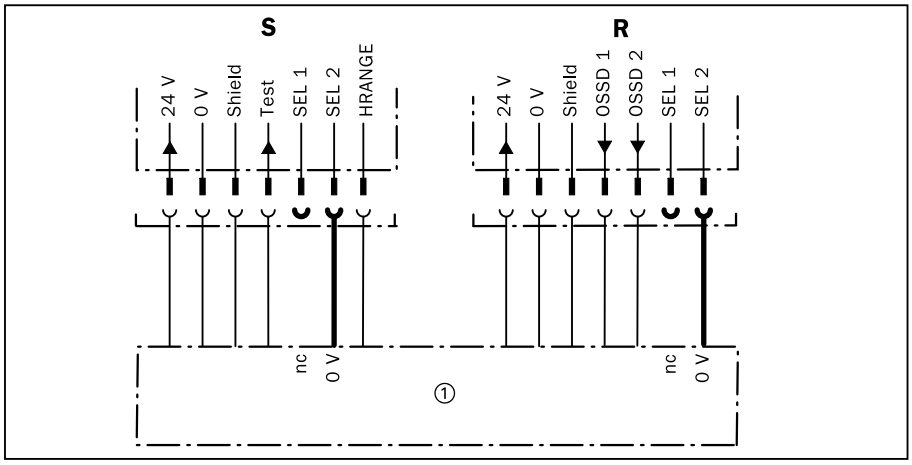

Fig. 5-10: Example: Connection of beam coding inputs for beam code 3
S = Sender ① = Machine
R = Receiver nc = No connection

Explanation The light beams are coded by connection of inputs SEL 1 and SEL 2 to 0 V. The sender and receiver must have the same coding. Configuration of codes is shown in *Table 5-1*.

SEL 1	SEL 2	Code
nc	nc	1
0 V	nc	2
nc	0 V	3
0 V	0 V	Not permitted (except in reset procedure)

Table 5-1: Selection of beam coding using inputs SEL 1 and SEL 2
nc = no connection

Note For type M 2000-A/P code 1 is preset at the factory. No additional beam coding is possible.

Warning

Insulate unconnected pins!

Pins that are not connected must be insulated in order to ensure code security.

 © SICK AG • Sicherheitstechnik • Germany • All rights reserved

5.4.4 Configuration of sender operating range (M 2000 only)

To minimize any possible interference with adjacent photoelectric switches, a high operating range should only be set when necessary.

Warning

Risk of reflection!

To avoid the risk of disruptive reflections and beam deflections, the correct operating range must be set and the minimum clearance to reflective surfaces must be maintained (see *Fig.3-15*).

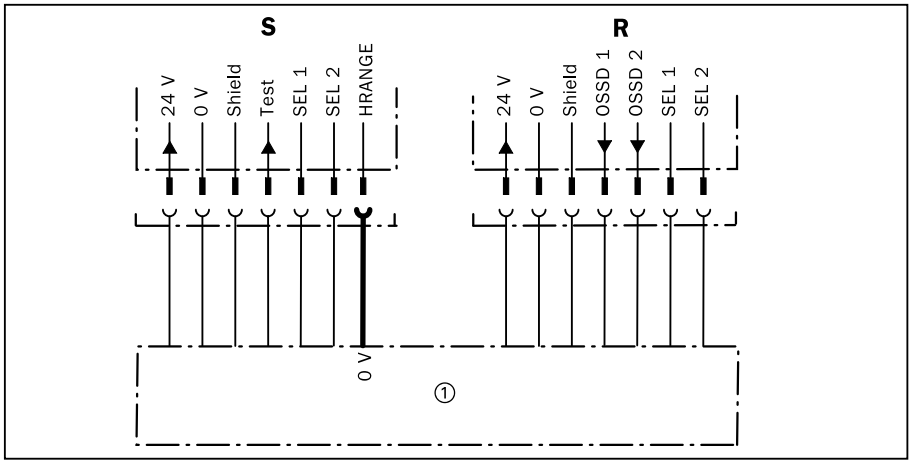

Fig. 5-11: Configuration of sender operating range, 0 V = Operating range 0 ... 6 m
S = Sender **R** = Receiver ① = Machine control

The HRANGE terminal on the sender can be used to choose between two sender operating ranges, as follows:

HRANGE	Operating range
0 V	0 ... 6 m or 0 ... 20 m
24 V	2 ... 25 m or 15 ... 70 m

Table 5-2: Selection of sender operating range with HRANGE (M 2000 only)

© SICK AG • Sicherheitstechnik • Germany • All rights reserved

5.4.5 Configuration of external device monitoring (EDM)

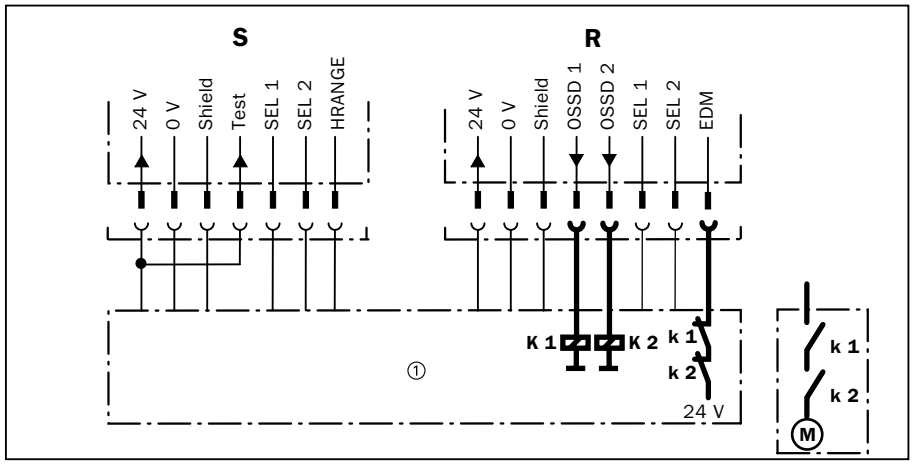

Fig. 5-12: C 2000/M 2000 with external device monitoring (EDM)
S = Sender **R** = Receiver ① = Machine **k 1, k 2** = Contactor

5.4.6 Restart interlock (RES)

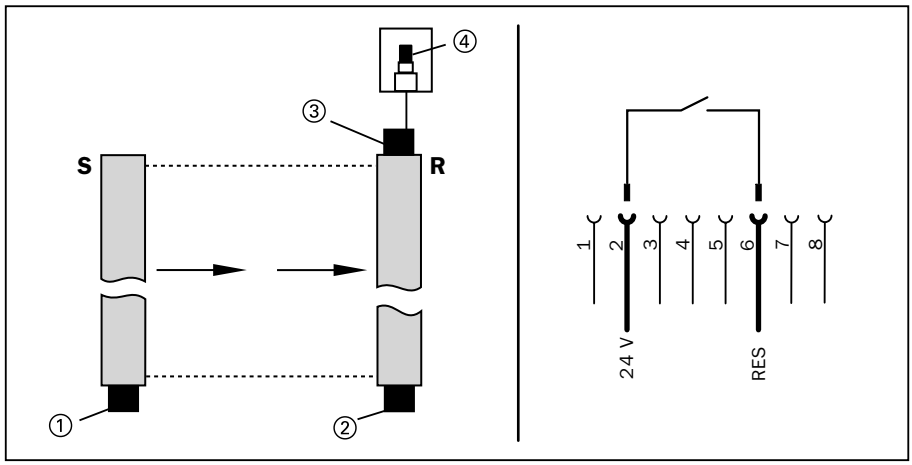

Fig. 5-13: C 2000/M 2000 with Reset button
S = Sender ② = System connector, receiver
R = Receiver ③ = Expansion socket, receiver
① = System connector, sender ④ = Reset button

Warning

Choose the correct mounting location for the Reset button!

The Reset button must be installed such that it cannot be operated from within the danger area and the danger area is visible at the time the button is pressed.

 © SICK AG • Sicherheitstechnik • Germany • All rights reserved

Note If the photoelectric switch is to be operated without restart interlock, the terminals of the expansion socket on the receiver must be wired as shown in *Fig. 5-14*. A pre-assembled connector (part no. 6 021 238, see *section 11.1 Accessories*) is also available to carry out this function.

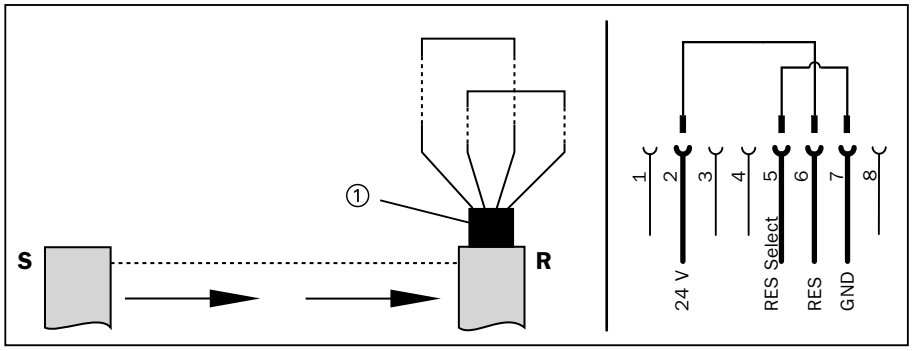

Fig. 5-14: C 2000/M 2000 with deactivated restart interlock
S = Sender **R** = Receiver ① = Expansion socket, receiver

Note If the restart interlock on the sender is deactivated, ensure that the machine control or the safety evaluation unit LE 20 provides the restart interlock function.

Warning

When a device is replaced please make sure that the configuration set for the application is retained and applied to the replacement devices.

5.4.7 Electrical connections for cascading

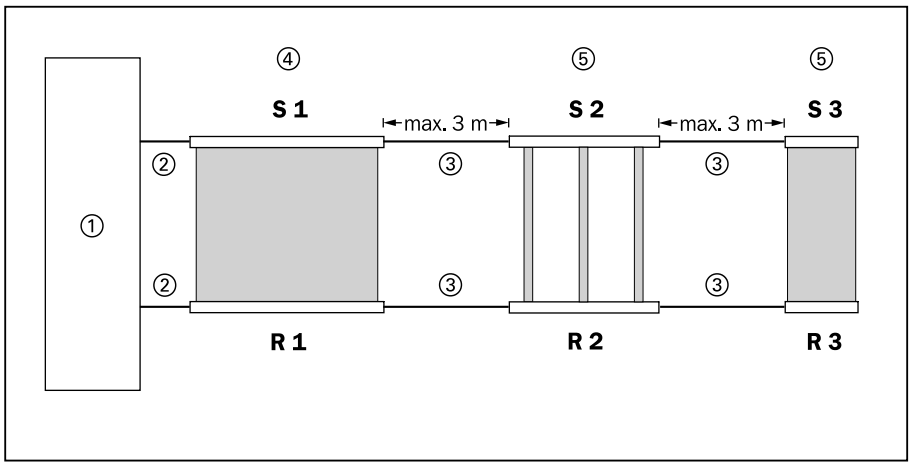

Fig. 5-15: Cable connections for cascading
S 1,2 = Sender (Cascade version)
S 3 = Sender (Standard)
R 1,2 = Receiver (Cascade version)
R 3 = Receiver (Standard)
① = Machine
② = Connecting cable to machine control
③ = Cascade connection cables
④ = Host devices
⑤ = Guest devices

© SICK AG • Sicherheitstechnik • Germany • All rights reserved

For cascade applications, the devices are interconnected via pre-assembled cables (*see section 11.1* Accessories) as shown in Fig. 5-15. The connection to the machine is made via the first sender/receiver pair of the cascade. The cable length between devices must not exceed 3 metres. The pre-assembled cables must be ordered separately.

6 Commissioning

6.1 Overview of commissioning steps

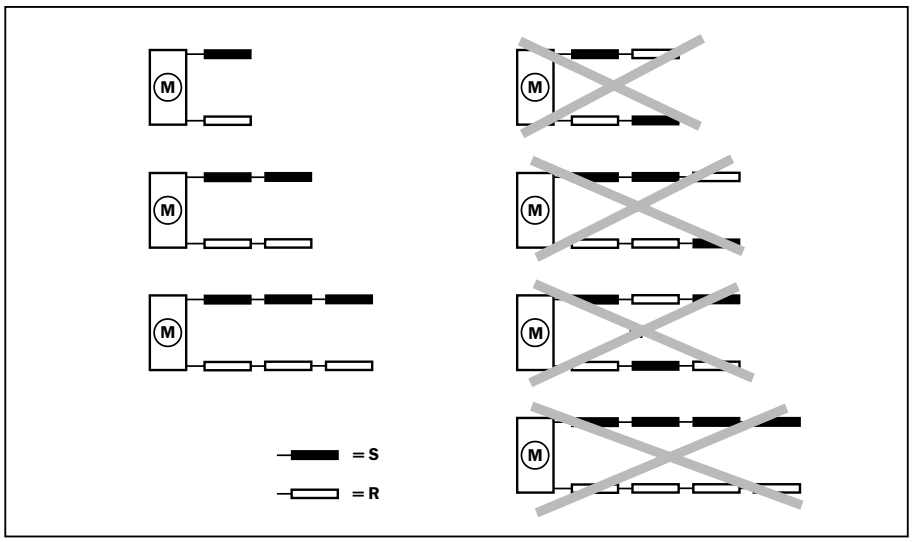

Fig. 6-1: Layout and numbers of cascade devices.
S = Sender **R** = Receiver **M** = Machine

Warning

Take care when planning the arrangement of devices in cascade!

In cascade, senders must always be connected to senders and receivers to receivers, in series (see *Fig. 6-1*). Senders and receivers must not mixed within a cascade.

 © SICK AG • Sicherheitstechnik • Germany • All rights reserved

Warning

Max. three sensor pairs in a cascade!

A maximum of three sender/receiver pairs are able to be connected in series in a cascade. If more devices are connected the safety function of the photoelectric switches is no longer ensured.

Warning

Eliminate hazardous movement!

Make sure the hazardous movement in the protected danger zone is disabled whilst carrying out alignment of the light beam. You must ensure the outputs of the control unit remain inactive.

The light beams must first be aligned. To do so, the device must be switched on while the hazardous movement in the protected danger area remains disabled.

6.2 Alignment of the light beams

A cascade system must be aligned in the order: S 1/R 1 -S 2/R 2 - S 3/R 3.

How to align the senders and receivers:

1. Connect the power supply to the photoelectric switches.
2. Loosen the clamping screws fixing the photoelectric switch.
3. Observe the alignment information on the 7-segment display of the receiver or sender/receiver module (M 2000-A/P) to adjust the photoelectric switch. Tighten the clamping screws when the alignment is set to its optimum condition.

Display Information:

0	The receiver cannot synchronize to the sender, the alignment is very poor.
1	A number of light beams are being received, further alignment is necessary.
2	All light beams are being received, further alignment is necessary for optimum performance.
No display	The alignment is now good → lock the devices in this position.

When the optimum alignment has been maintained for more than 2 minutes with the switching outputs ON, the system will automatically switch alignment mode off. To continue aligning, the power supply must be switched off and back on again.

© SICK AG • Sicherheitstechnik • Germany • All rights reserved

7 Troubleshooting

In the event of a fault the LEDs and the 7-segment display on the sender and receiver of the C 2000, M 2000 and M 2000-A/P show fault diagnosis information. The following tables provide an explanation to the displayed information, the causes of faults and the possibilities for testing, as well as remedial action or other measures to be taken.

Sender and receiver

Display	Explanation	Reason, Test	Remedial action/measures
7-segment display			
(L.) and(5.), alternating	A guest-device has detected a configuration error in the system	The parameters (number of beams/position in the system) of the hosts or the other guest may have changed	Check system parameters; execute reset procedure as necessary
(L.) and(6.), alternating	Error in reset procedure	The Reset procedure was not executed correctly	Repeat reset procedure
5.	Reset procedure terminated		Disconnect power and switch on again
6. (host only)	The host has detected a configuration error in the system	The parameters (number of beams/position in the system) of at least one guest have changed	Check system parameters; execute reset procedure as necessary
• (dot)	Device is OFF	Another device in the cascade has switched to OFF	Rectify error in other device
‾| •	Reset procedure started	SEL 1 and SEL 2 are connected to GND. Device waiting for this connection to open, see code L.1.	Execute reset procedure using correct time sequence (see *section 3.5*), check wiring
|_ •	Reset procedure started	SEL 1 and SEL 2 open. Device waiting for this connection to close, see code L.6.	Execute reset procedure using correct time sequence (see *section 3.5*), check wiring

Table 7-1: Troubleshooting table, sender and receiver C 2000, M 2000

 © SICK AG • Sicherheitstechnik • Germany • All rights reserved

Sender only

Display	Explanation	Reason, Test	Remedial action/measures
The yellow status LED on the sender is not lit	The device has no supply voltage	Check power supply	Check wiring, measure voltage
7-segment display:			
E.	System fault	Defective sender	Replace sender
o.	Cyclic system test, sender inactive	Test input open (0 V)	Connect test input to 24 V
H. *) (M 2000 only)	High transmission power, 2 ... 25 m or 15 ... 70 m	HRANGE (24 V)	
(L.) and(1.), alternating	Invalid beam coding (SEL 1 and SEL 2 to GND)	Check connections for beam coding on sender and receiver	Select valid code
(L.) and4., alternating	Connection within the cascade faulty	Check connecting cable	Replace connecting cable
Coding *)			
–	Code 1		Wire same coding on sender and receiver, switch power off and back on again
– –	Code 2		
– – –	Code 3		

Table 7-2: Troubleshooting table, sender, C 2000, M 2000
*) = Displayed only within a few seconds of power-up

Receiver only

Display	Explanation	Reason, Test	Remedial action/measures
LED amber	Weak light beam	Front screen contamination, sender/receiver	Clean front screen
7-segment display:			
0.	No sender synchronization	Sender/receiver misaligned	Align sender and receiver
1.	Sender synchronized, but at least one other light beam broken	Sender/receiver misaligned	Align sender and receiver
2.	Light beam too weak	Sender/receiver misaligned or dirty/scratched front screen	Align sender and receiver or clean front screen, if scratched replace sender or receiver

Table 7-3: Troubleshooting table, receiver, C 2000, M 2000

 © SICK AG • Sicherheitstechnik • Germany • All rights reserved

Receiver only (continued)

Display	Explanation	Reason, Test	Remedial action/measures
E.	System fault	Receiver defective	Replace receiver
(F.) and(1.), alternating	Current OSSD 1 > 500 mA or OSSD 2 > 500 mA	Overload condition	Check load and wiring
(F.) and(2.), alternating	OSSD 1 fixed at 24 V	Check wiring for short-circuit	Eliminate short-circuit
(F.) and(3.), alternating	OSSD 1 fixed at GND	Check wiring for short-circuit	Eliminate short-circuit
(F.) and(5.), alternating	OSSD 2 fixed at 24 V	Check wiring for short-circuit	Eliminate short-circuit
(F.) and(6.), alternating	OSSD 2 fixed at GND	Check wiring for short-circuit	Eliminate short-circuit
(F.) and(7.), alternating	Short-circuit between OSSD 1 and OSSD 2	Check wiring	Eliminate wiring fault
(L.) and(1.), alternating	Invalid beam coding (SEL 1 and SEL 2 to GND)	Check connections for beam coding on sender and receiver	Select valid code
(L.) and(3.), alternating	Unrecognised external light beam detected	Other photoelectric devices or reflective surfaces in the vicinity	Change beam coding or install barriers, e.g. partition
(L.) and(4.), alternating	Connection within cascade faulty		
(L.) and(7.), alternating	Guest OSSD static	Short-circuit in cable or device	Replace cable, check devices
(L.) and(8.), alternating	RES-SEL error	RES and RES-SEL are connected to 0 V	Check RES-SEL and RES connection
8.	EDM error	Input is open	Check relays and wiring
Coding *)			
–	Code 1		Wire same coding on sender and receiver, switch power off and back on again
– –	Code 2		
– – –	Code 3		

Table 7-3: Troubleshooting table, receiver, C 2000,M 2000 (continued)

 © SICK AG • Sicherheitstechnik • Germany • All rights reserved

8 Maintenance

8.1 In-service care

Damage to the front screen

The operating range and sensitivity of the sender and receiver are impaired by scratches and contamination of the front screen.

➢ Avoid scratching or scouring the front screen

Clean the front screen at regular intervals with a mild, water soluble cleaning agent without powder additive.

Note If the front screen is damaged (e.g. punctured) the device must be replaced.

8.2 Maintenance

The C 2000, M 2000 and M 2000-A/P devices operate completely maintenance free. Faults on the C 2000 safety light curtain, the M 2000 multi-beam photoelectric safety switch and the M 2000-A/P are indicated on the guard's 7-segment display.

Any wear and tear on the devices should be detected by regular testing and inspection of the protective devices (see *section 2.5*).

© SICK AG • Sicherheitstechnik • Germany • All rights reserved

9 Technical Data

Optical data	**C 2000**	**M 2000**	**M 2000-A/P**
Optical data	150 ... 1200 mm (housing. 34 x 29 mm)) 1350 ... 1800 mm (housing. 40 x 48 mm)	to 1400 mm	
Protective field operating range	0 ... 6 m/2.5 ... 19 m	0 ... 25 m/0 ... 70 m (with guard range selector)	0 ... 6 m
Beam gap		300, 400, 500 mm	500 mm
Resolution options	20 (protective field height max. 1200 mm)/30/40 mm	116, 170 mm	
Optical beam diameter		13 mm/23 mm (70 m)	13 mm
Wavelength (typical)	950 nm		
Electrical data	**C 2000**	**M 2000**	**M 2000-A/P**
Supply voltage U_B	24 V DC ± 20 % (please refer to information regarding power supply in *section 2.4.2*!) 5 % ripple *)		
Power consumption, sender	max. 6.2 W	3.7 W	7.5 W
Power consumption, receiver	max. 8 W	5 W	
Self-test time (of safety-related functions such as OSSDs and all optical links)	3 s (The entire test duration incl. internal data memory is 23 minutes.)		
Synchronization method	Optical		
Max. response time	7 ... 34 ms (see rating plate and *section 10.1 Ordering data*)	8 ms	7 ms
Connecting cable	0.25 mm^2 (M 12 connector), max. length 15 m or 1 mm^2 (Hirschmann connector), max. length 60 m **)		
Outputs OSSD 1 and OSSD 2 (max. cable length 60 m; reference figures are measured at the sytem connector)	PNP monitored and short-circuit-proof Switching current I_{max} = 500 mA Switching voltage $U_{high\ min}$ = UB - 2.25 V at 500 mA, $U_{low\ max}$ = 1 V Inductive switching capacity Pmax ind = 0.8 W (see *Fig. 9-1*) Leakage current in case of failure < 190 µA Test pulse data: Test pulse width 240 µs ± 23%, test pulse rate 28 ms ± 6 ms ***) Residual current at signal level "0" I = 0 mA, max. capacitive load 2.2 µF		

Table 9-1: Technical data table, C 2000, M 2000 and M 2000-A/P
*) Maximum and minimum voltage limits must not be exceeded.
**) The length of the connecting cables is limited due to the maximum permissible wire resistance of 4 Ω.
***) See *section 3.3.6 OSSD switching outputs*

 © SICK AG • Sicherheitstechnik • Germany • All rights reserved

Electrical data	**C 2000**	**M 2000**	**M 2000-A/P**
Test input	$U_{max} = U_B$, "1" > 13 V, "0" < 5 V; I_{test} = 10 mA at 24 V		
	Pulse duration > 20 ms + max. response time	Pulse duration > 15 ms + max. response time	
RES	$U_{max} = U_B$, "1" > 8 V, "0" < 4 V		
EDM	$U_{max} = U_B$, "1" > 12 V, "0" < 5 V; I_{test} = 10 mA ai 24 V		
SEL 1, SEL 2	"1" = open, "0" < 0.8 V III *)		
HRANGE		$U_{max} = U_B$, "1" > 14 V, "0" < 9 V, I_{HRANGE} = 1 mA b. 24 V	
Operating data	**C 2000**	**M 2000**	**M 2000-A/P**
Protection class	III *)		
Enclosure rating	IP 65		
Safety category	2		
Ambient operating temperature	0° C ... +55° C		
Storage temperature	–25° C ... +70° C		
Relative humidity	15 ... 95 %		
Vibration resistance	5 g/10 Hz ... 55 Hz to IEC 68-2-6		
Shock resistance	10 g/16 ms to IEC 68-2-29		
Weight	Dependent on type, between 0.27 kg and 3.88 kg	Dependent on type, between 1.25 kg and 2.86 kg	1.41 kg

Tab. 9-1: Technical data table, C 2000, M 2000 and M 2000-A/P (continued)
*) The circuits connected to the inputs and outputs must conform to the creepage and clearance distances specified in the relevant standards with regard to safe isolation.

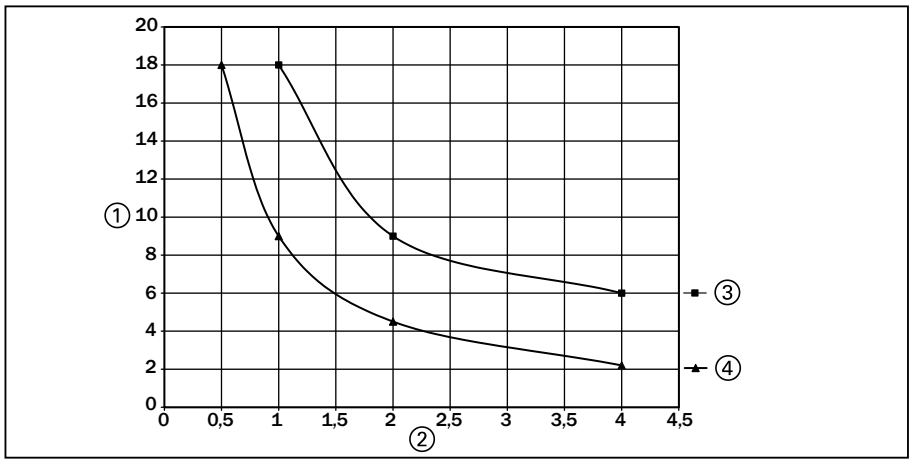

Fig. 9-1: Inductive switching capacity of the OSSD outputs as a function of switching frequency and load current
① = Load inductance (Henry)
② = Switching frequency (1/s)
③ = Load current 400 mA
④ = Load current 500 mA

© SICK AG • Sicherheitstechnik • Germany • All rights reserved

The switching outputs have a clamp feature. If high load current with inductance is switched at a permanently high switching frequency in high ambient temperature, the electronics may be damaged. *Fig. 9-1* provides guidance in assessing whether the load has the correct inductance levels suitable for the switching frequency, load current and switching contacts.

If connection cables with large cross-sectional areas are used, the distance between the devices may be extended. *Fig. 9-2* and *Fig. 9-3* show the possible cable lengths for M 12 and Hirschmann connectors with larger cable cross-section area.

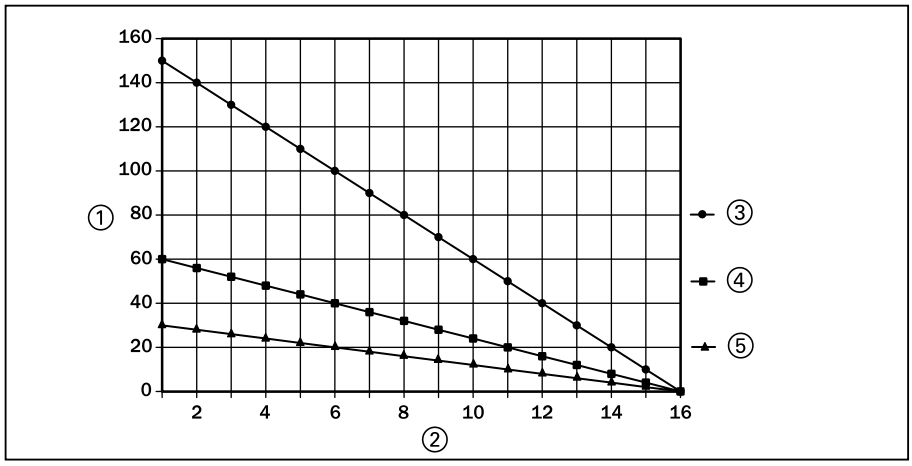

Fig. 9-2: Possible cable lengths for M 12 connectors (0.25 mm²) when extended with a larger cross-section area cable after x metres
① = Remaining cable length after extension in metres
② = Cable length in metres with a cable cross-section area of 0.25 mm²
③ = Cable cross-section area of 2.5 mm²
④ = Cable cross-section area of 1.0 mm²
⑤ = Cable cross-section area of 0.5 mm²

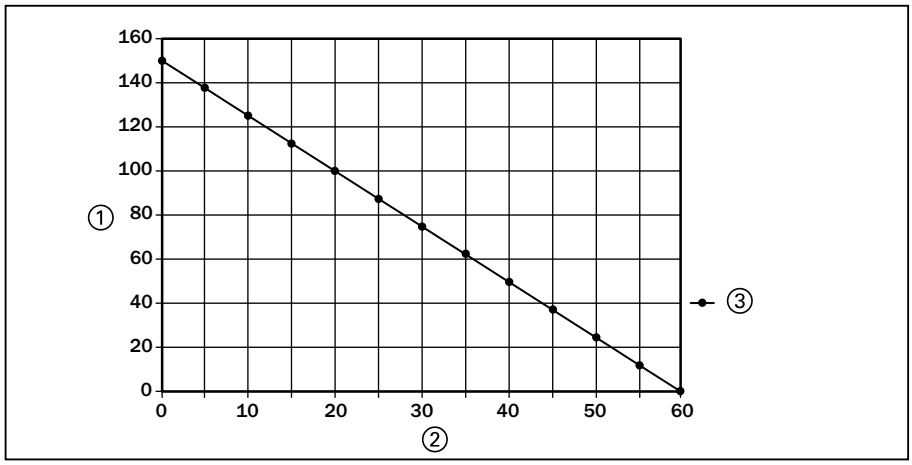

Fig. 9-3: Possible cable lengths for Hirschmann connectors (1.0 mm²) when extended with a larger cross-section area cable after x metres
① = Remaining cable length after extension in metres
② = Cable length in metres with a cable cross-section area of 0.25 mm²
③ = Cable cross-section area of 2.5 mm²

 © SICK AG • Sicherheitstechnik • Germany • All rights reserved

10 Ordering Data

Sender package:

– Sender unit
– Two sliding nuts for side brackets

Receiver package:

– Receiver unit
– Two sliding nuts for side brackets
– One test rod
– One set of operating instructions
– One "Importance Notice" adhesive label

Applicable accessories:

All versions:
– 1x mounting kit
– 2x connection cables

Receiver version with RES:
– 1x cable plug M 12

Cascade versions:
– 2x cascade connecting cables

© SICK AG • Sicherheitstechnik • Germany • All rights reserved

10.1 Ordering data, C 2000

All versions are fitted with M 12 connectors. All C 2000 versions have integral EDM.

10.1.1 Standard version:

Operating range 0 ... 6 m

Protective field height S < 1350 mm (small housing)
S ≥ 1350 mm (large housing)

C 2000, 0 ... 6 m

S < 1350 mm

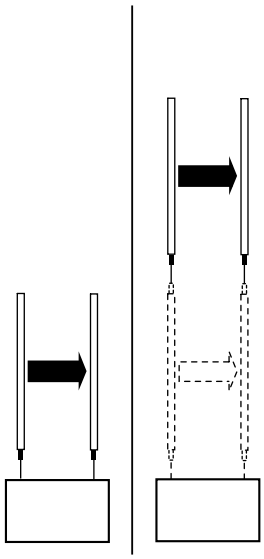

① S [mm]	② [kg]	③ [mm]	④	⑤ [ms]	⑥ ⑦	⑥ ⑧
150	0.27	20	15	10	1 016 563	1 016 564
		30	8	8	1 016 475	1 016 476
		40	5	7.5	1 016 565	1 016 566
300	0.38	20	30	10	1 016 448	1 016 449
		30	16	8.5	1 016 568	1 016 569
		40	10	8.5	1 016 570	1 016 571
450	0.51	20	45	14	1 016 573	1 016 459
		30	24	8.5	1 016 454	1 016 455
		40	15	10	1 016 456	1 016 457
600	0.65	20	60	18	1 016 574	1 016 575
		30	32	10.5	1 016 477	1 016 478
		40	20	9.5	1 016 576	1 016 577
750	0.78	20	75	22	1 016 579	1 016 580
		30	40	12.5	1 016 479	1 016 480
		40	25	9	1 016 581	1 016 582
900	0.91	20	90	26	1 016 584	1 016 585
		30	48	15	1 016 481	1 016 482
		40	30	10	1 016 586	1 016 587
1050	1.04	20	105	30	1 016 589	1 016 590
		30	56	17	1 016 483	1 016 484
		40	35	11.5	1 016 591	1 016 592
1200	1.18	20	120	34	1 016 464	1 016 465
		30	64	19	1 016 594	1 016 595
		40	40	13	1 016 596	1 016 597
S ≥ 1350 mm						
1350	2.96	–	–	–	–	–
		30	72	21	1 016 600	1 016 601
		40	45	14	1 016 603	1 016 604
1500	3.27	–	–	–	–	–
		30	80	24	1 016 605	1 016 606
		40	50	16	1 016 608	1 016 609
1650	3.57	–	–	–	–	–
		30	88	26	1 016 610	1 016 611
		40	55	17	1 016 613	1 016 614
1800	3.88	–	–	–	–	–
		30	96	28	1 016 615	1 016 616
		40	60	18	1 016 618	1 016 619

① = Protection zone height S ③ = Resolution ⑤ = Response time ⑦ = Sender
② = Weight ④ = Number of beams ⑥ = Part no. ⑧ = Receiver

 © SICK AG • Sicherheitstechnik • Germany • All rights reserved

Standard version:

Operating range 2.5 ... 19 m

Protective field height S < 1350 mm (small housing)
S ≥ 1350 mm (large housing)

C 2000, 2.5 ... 19 m

S < 1350 mm

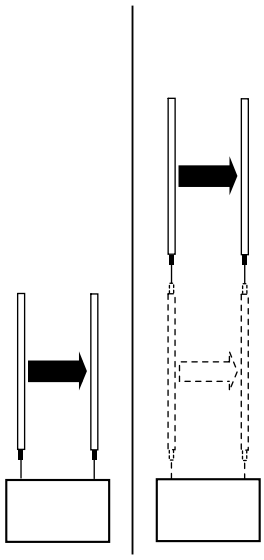

① S [mm]	② [kg]	③ [mm]	④	⑤ [ms]	⑥ ⑦	⑥ ⑧
150	0.27	20	15	10	1 016 631	1 016 564
		30	8	8	1 016 567	1 016 476
		40	5	7.5	1 016 637	1 016 566
300	0.38	20	30	10	1 016 632	1 016 449
		30	16	8.5	1 016 572	1 016 569
		40	10	8.5	1 016 638	1 016 571
450	0.51	20	45	14	1 016 458	1 016 459
		30	24	8.5	1 016 460	1 016 455
		40	15	10	1 016 462	1 016 457
600	0.65	20	60	18	1 016 633	1 016 575
		30	32	10.5	1 016 578	1 016 478
		40	20	9.5	1 016 639	1 016 577
750	0.78	20	75	22	1 016 634	1 016 580
		30	40	12.5	1 016 583	1 016 480
		40	25	9	1 016 640	1 016 582
900	0.91	20	90	26	1 016 635	1 016 585
		30	48	15	1 016 588	1 016 482
		40	30	10	1 016 641	1 016 587
1050	1.04	20	105	30	1 016 636	1 016 590
		30	56	17	1 016 593	1 016 484
		40	35	11.5	1 016 642	1 016 592
1200	1.18	20	120	34	1 016 466	1 016 465
		30	64	19	1 016 599	1 016 595
		40	40	13	1 016 643	1 016 597
S ≥ 1350 mm						
1350	2.96	–	–	–	–	–
		30	x	21	1 016 602	1 016 601
		40	x	14	1 016 644	1 016 604
1500	3.27	–	–	–	–	–
		30	x	24	1 016 607	1 016 606
		40	x	16	1 016 646	1 016 609
1650	3.57	–	–	–	–	–
		30	x	26	1 016 612	1 016 611
		40	x	17	1 016 647	1 016 614
1800	3.88	–	–	–	–	–
		30	x	28	1 016 617	1 016 616
		40	x	18	1 016 648	1 016 619

① = Protection zone height S ③ = Resolution ⑤ = Response time ⑦ = Sender
② = Weight ④ = Number of beams ⑥ = Part no. ⑧ = Receiver

 © SICK AG • Sicherheitstechnik • Germany • All rights reserved

10.1.2 RES version

Operating range 0 ... 6 m

Protective field height S < 1350 mm (small housing)
S ≥ 1350 mm (large housing)

C 2000, 0 ... 6 m	① S [mm]	② [kg]	③ [mm]	④	⑤ [ms]	⑥ ⑦	⑥ ⑧
S < 1350 mm	300	0.38	20	30	10	1 016 448	1 018 073
			30	16	85	1 016 568	1 016 974
			40	10	8.5	1 016 570	1 016 973
	450	0.51	20	45	14	1 016 573	1 018 079
			30	24	8.5	1 016 454	1 018 081
			40	15	10	1 016 456	1 018 083
	600	0.65	20	60	18	1 016 574	1 018 056
			30	32	10.5	1 016 477	1 018 089
			40	20	9.5	1 016 576	1 018 091
	750	0.78	20	75	22	1 016 579	1 018 096
			30	40	12.5	1 016 479	1 018 098
			40	25	9	1 016 581	1 018 100
	900	0.91	20	90	26	1 016 584	1 018 105
			30	48	15	1 016 481	1 018 107
			40	30	10	1 016 586	1 018 107
	1050	1.04	20	105	30	1 016 589	1 018 114
			30	56	17	1 016 483	1 018 116
			40	35	11.5	1 016 591	1 018 118
	1200	1.18	20	120	34	1 016 464	1 016 970
			30	64	19	1 016 594	1 018 124
			40	40	13	1 016 596	1 018 126
S ≥ 1350 mm	1350	2.96	–	–	–	–	–
			30	72	21	1 016 600	1 018 058
			40	45	14	1 016 603	1 018 130
	1500	3.27	–	–	–	–	–
			30	80	24	1 016 605	1 018 134
			40	50	16	1 016 608	1 018 136
	1650	3.57	–	–	–	–	–
			30	88	26	1 016 610	1 018 140
			40	55	17	1 016 613	1 018 142
	1800	3.88	–	–	–	–	–
			30	96	28	1 016 615	1 018 147
			40	60	18	1 016 618	1 018 149

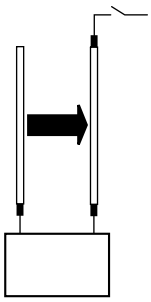

① = Protection zone height S ③ = Resolution ⑤ = Response time ⑦ = Sender
② = Weight ④ = Number of beams ⑥ = Part no. ⑧ = Receiver

 © SICK AG • Sicherheitstechnik • Germany • All rights reserved

RES version

Operating range 2.5 ... 19 m

Protective field height S < 1350 mm (small housing)
S ≥ 1350 mm (large housing)

C 2000, 2.5 ... 19 m	① S [mm]	② [kg]	③ [mm]	④	⑤ [ms]	⑥ ⑦	⑥ ⑧
S < 1350 mm 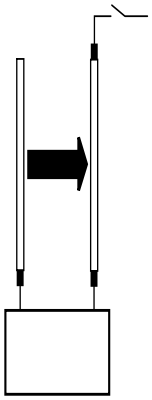	300	0.38	20	30	10	1 016 632	1 018 073
			30	16	8.5	1 016 572	1 016 974
			40	10	8.5	1 016 638	1 016 973
	450	0.51	20	45	14	1 016 458	1 018 079
			30	24	8.5	1 016 460	1 018 081
			40	15	10	1 016 462	1 018 083
	600	0.65	20	60	18	1 016 633	1 018 056
			30	32	10.5	1 016 578	1 018 089
			40	20	9.5	1 016 639	1 018 091
	750	0.78	20	75	22	1 016 634	1 018 096
			30	40	12.5	1 016 583	1 018 098
			40	25	9	1 016 640	1 018 100
	900	0.91	20	90	26	1 016 635	1 018 105
			30	48	15	1 016 588	1 018 107
			40	30	10	1 016 641	1 018 109
	1050	1.04	20	105	30	1 016 636	1 018 114
			30	56	17	1 018 408	1 018 116
			40	35	11.5	1 016 593	1 018 118
	1200	1.18	20	120	34	1 016 466	1 016 970
			30	64	19	1 016 599	1 018 124
			40	40	13	1 016 643	1 018 126
S ≥ 1350 mm	1350	2.96	–	–	–	–	–
			30	x	21	1 016 602	1 018 058
			40	x	14	1 016 644	1 018 130
	1500	3.27	–	–	–	–	–
			30	x	24	1 016 607	1 018 134
			40	x	16	1 016 646	1 018 136
	1650	3.57	–	–	–	–	–
			30	x	26	1 016 612	1 018 140
			40	x	17	1 016 647	1 018 142
	1800	3.88	–	–	–	–	–
			30	x	28	1 016 617	1 018 147
			40	x	18	1 016 648	1 018 149

① = Protection zone height S ③ = Resolution ⑤ = Response time ⑦ = Sender
② = Weight ④ = Number of beams ⑥ = Part no. ⑧ = Receiver

 © SICK AG • Sicherheitstechnik • Germany • All rights reserved

10.1.3 Cascade version

Operating range 0 ... 6 m

Protective field height S < 1350 mm (small housing)
S ≥ 1350 mm (large housing)

C 2000, 0 ... 6 m

S < 1350 mm

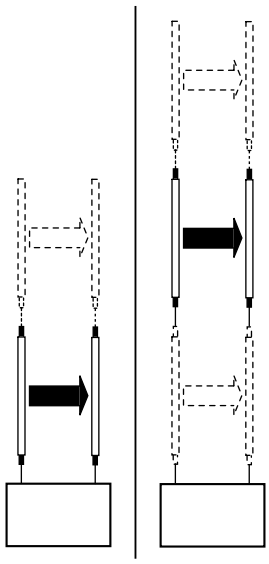

① S [mm]	② [kg]	③ [mm]	④	⑤ [ms]	⑥ ⑦	⑥ ⑧
300	0.38	20	30	10	1 018 072	1 018 073
		30	16	8.5	1 018 074	1 016 974
		40	10	8.5	1 016 967	1 016 973
450	0.51	20	45	14	1 018 078	1 018 079
		30	24	8.5	1 018 080	1 018 081
		40	15	10	1 018 082	1 018 083
600	0.65	20	60	18	1 018 055	1 018 056
		30	32	10.5	1 018 087	1 018 089
		40	20	9.5	1 018 090	1 018 091
750	0.78	20	75	22	1 018 095	1 018 096
		30	40	12.5	1 018 097	1 018 098
		40	25	9	1 018 099	1 018 100
900	0.91	20	90	26	1 018 104	1 018 105
		30	48	15	1 018 106	1 018 107
		40	30	10	1 018 108	1 018 109
1050	1.04	20	105	30	1 018 113	1 018 114
		30	56	17	1 018 115	1 018 116
		40	35	11.5	1 018 117	1 018 118
1200	1.18	20	120	34	1 018 122	1 016 970
		30	64	19	1 018 123	1 018 124
		40	40	13	1 018 125	1 018 126
S ≥ 1350 mm						
1350	2.96	–	–	–	–	–
		30	x	21	1 018 057	1 018 058
		40	x	14	1 018 129	1 018 130
1500	3.27	–	–	–	–	–
		30	x	24	1 018 133	1 018 134
		40	x	16	1 018 135	1 018 136
1650	3.57	–	–	–	–	–
		30	x	26	1 018 139	1 018 140
		40	x	17	1 018 141	1 018 142
1800	3.88	–	–	–	–	–
		30	x	28	1 018 145	1 018 147
		40	x	18	1 018 148	1 018 149

① = Protection zone height S ③ = Resolution ⑤ = Response time ⑦ = Sender
② = Weight ④ = Number of beams ⑥ = Part no. ⑧ = Receiver

 © SICK AG • Sicherheitstechnik • Germany • All rights reserved

Cascade version

Operating range 2.5 ... 19 m

Protective field height S < 1350 mm (small housing)
S ≥ 1350 mm (large housing)

C 2000, 2.5 ... 19 m

S < 1350 mm

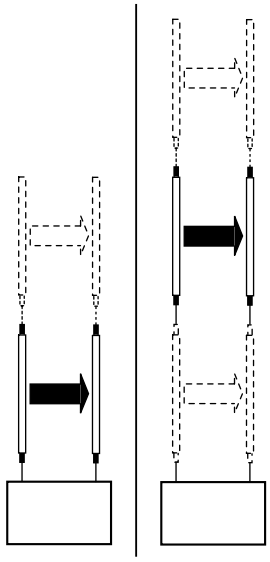

① S [mm]	② [kg]	③ [mm]	④	⑤ [ms]	⑥ ⑦	⑥ ⑧
300	0.38	20	30	10	1 018 075	1 018 073
		30	16	8.5	1 016 968	1 016 974
		40	10	8.5	1 018 077	1 016 973
450	0.51	20	45	14	1 018 084	1 018 079
		30	24	8.5	1 018 085	1 018 081
		40	15	10	1 018 086	1 018 083
600	0.65	20	60	18	1 018 092	1 018 056
		30	32	10.5	1 018 093	1 018 089
		40	20	9.5	1 018 094	1 018 091
750	0.78	20	75	22	1 018 101	1 018 096
		30	40	12.5	1 018 102	1 018 098
		40	25	9	1 018 103	1 018 100
900	0.91	20	90	26	1 018 110	1 018 105
		30	48	15	1 018 111	1 018 107
		40	30	10	1 018 112	1 018 109
1050	1.04	20	105	30	1 018 119	1 018 114
		30	56	17	1 018 120	1 018 116
		40	35	11.5	1 018 121	1 018 118
1200	1.18	20	120	34	1 016 964	1 016 970
		30	64	19	1 018 127	1 018 124
		40	40	13	1 018 128	1 018 126
S ≥ 1350 mm						
1350	2.96	–	–	–	–	–
		30	x	21	1 018 131	1 018 058
		40	x	14	1 018 132	1 018 130
1500	3.27	–	–	–	–	–
		30	x	24	1 018 137	1 018 134
		40	x	16	1 018 138	1 018 136
1650	3.57	–	–	–	–	–
		30	x	26	1 018 143	1 018 140
		40	x	17	1 018 144	1 018 142
1800	3.88	–	–	–	–	–
		30	x	28	1 018 150	1 018 147
		40	x	18	1 018 151	1 018 149

① = Protection zone height S ③ = Resolution ⑤ = Response time ⑦ = Sender
② = Weight ④ = Number of beams ⑥ = Part no. ⑧ = Receiver

 © SICK AG • Sicherheitstechnik • Germany • All rights reserved

10.2 Ordering data, M 2000

All M 2000 versions have integral EDM, except versions with Hirschmann connector 6-pin + PE (receiver only).

Standard version:
The sender and receiver optionally have Hirschmann 6-pin + PE or M 12 connectors.

RES, Cascade version:
On the devices with Hirschmann connector the senders have 6-pin + PE connectors and the receivers 11-pin + PE connectors. Alternatively, senders and receivers can also be supplied with M 12 connectors.

The Hirschmann connector permits connection of 1 mm² cable cross-section area (max. cable length 60 m).
The M 12 connector permits connection of 0.25 mm² cable cross-section area (max. cable length 15 m).

10.2.1 Standard version:

Operating range 0 ... 25 m/0 ... 70 m

	①	② [mm]	③ S [mm]	④	⑤ ⑥	⑤ ⑦
M 2000, 0 ... 25 m 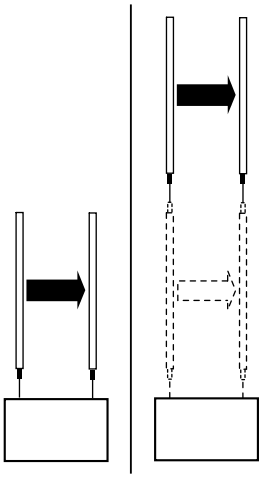	2	500	500	Hirschmann	1 016 405	1 016 421
				M 12	1 018 186	1 018 187
	3	400	800	Hirschmann	1 016 428	1 016 429
				M 12	1 018 188	1 018 189
	4	300	900	Hirschmann	1 016 509	1 016 510
				M 12	1 018 190	1 018 191
	6	170*)	1099	Hirschmann	1 016 446	1 016 447
				M 12	1 018 192	1 018 193
	7	170*)	1256	Hirschmann	1 016 434	1 016 435
				M 12	1 018 194	1 018 195
	8	116*)	927	Hirschmann	1 016 438	1 016 439
				M 12	1 018 196	1 018 197
	8	170*)	1413	Hirschmann	1 016 440	1 016 441
				M 12	1 018 198	1 018 199
	9	170*)	1570	Hirschmann	1 016 442	1 016 443
				M 12	1 018 200	1 018 201
M 2000, 0 ... 70 m	2	500	500	Hirschmann	1 018 172	1 018 173
				M 12	1 018 174	1 018 175
	3	400	800	Hirschmann	1 018 176	1 018 177
				M 12	1 018 178	1 018 179
	4	300	900	Hirschmann	1 018 180	1 018 181
				M 12	1 018 182	1 018 183
M 2000-A/P, 0 ... 6 m	2	500	500	Hirschmann 11 + PE	⑧ 1 016 513	⑨ 1 016 677
				M 12	1 018 361	1 016 677

① = Number of beams
② = Number of beams/resolution*
③ = Protection zone height S
④ = Connector
⑤ = Part no.
⑥ = Sender
⑦ = Receiver
⑧ = Sender/receiver unit
⑨ = Reflex mirror

 © SICK AG • Sicherheitstechnik • Germany • All rights reserved

10.2.2 RES version:

Operating range 0 ... 25 m/0 ... 70 m

	①	② [mm]	③ S [mm]	④	⑤ ⑥	⑤ ⑦
M 2000, 0 ... 25 m 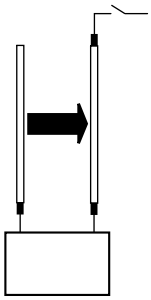	2	500	500	Hirschmann	1 016 405	1 018 032
				M 12	1 018 186	1 018 213
	3	400	800	Hirschmann	1 016 428	1 018 034
				M 12	1 018 188	1 018 215
	4	300	900	Hirschmann	1 016 509	1 018 217
				M 12	1 018 190	1 018 219
	6	170*)	1099	Hirschmann	1 016 446	1 018 221
				M 12	1 018 192	1 018 223
	7	170*)	1256	Hirschmann	1 016 434	1 018 225
				M 12	1 018 194	1 018 227
	8	116*)	927	Hirschmann	1 016 438	1 018 229
				M 12	1 018 196	1 018 231
	8	170*)	1413	Hirschmann	1 016 440	1 018 233
				M 12	1 018 198	1 018 235
	9	170*)	1570	Hirschmann	1 016 442	1 018 036
				M 12	1 018 200	1 018 237
M 2000, 0 ... 70 m	2	500	500	Hirschmann	1 018 172	1 018 206
				M 12	1 018 174	1 018 207
	3	400	800	Hirschmann	1 018 176	1 018 208
				M 12	1 018 178	1 018 209
	4	300	900	Hirschmann	1 018 180	1 018 210
				M 12	1 018 182	1 018 211
M 2000-A/P, 0 ... 6 m	2	500	500	Hirschmann 11 + PE	⑧ 1 018 239	⑨ 1 016 677
				M 12	1 018 362	1 016 677

① = Number of beams
② = Number of beams/resolution*
③ = Protection zone height S
④ = Connector
⑤ = Part no.
⑥ = Sender
⑦ = Receiver
⑧ = Sender/receiver unit
⑨ = Reflex mirror

 © SICK AG • Sicherheitstechnik • Germany • All rights reserved

10.2.3 Cascade version

Operating range 0 ... 25 m

M 2000
0 ... 25 m

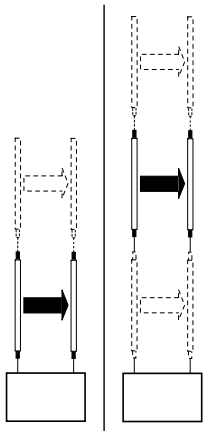

①	② [mm]	③ S [mm]	④	⑤ ⑥	⑤ ⑦
2	500	500	Hirschmann	1 018 031	1 018 032
			M 12	1 018 212	1 018 213
3	400	800	Hirschmann	1 018 033	1 018 034
			M 12	1 018 214	1 018 215
4	300	900	Hirschmann	1 018 216	1 018 217
			M 12	1 018 218	1 018 219
6	170*)	1099	Hirschmann	1 018 220	1 018 221
			M 12	1 018 222	1 018 223
7	170*)	1256	Hirschmann	1 018 224	1 018 225
			M 12	1 018 226	1 018 227
8	116*)	927	Hirschmann	1 018 228	1 018 229
			M 12	1 018 230	1 018 231
8	170*)	1413	Hirschmann	1 018 232	1 018 233
			M 12	1 018 234	1 018 235
9	170*)	1570	Hirschmann	1 018 035	1 018 036
			M 12	1 018 236	1 018 237

① = Number of beams
② = Number of beams/resolution*
③ = Protection zone height S
④ = Connector
⑤ = Part no.
⑥ = Sender
⑦ = Receiver

 © SICK AG • Sicherheitstechnik • Germany • All rights reserved

11 Appendix

11.1 Accessories

Article	Part no.
C 2000/M 2000 Standard version	
Connection cable M 12, 8-pin, straight	
with 2.5 m cable length	6 020 537
with 5.0 m cable length	6 020 354
with 7.5 m cable length	6 020 353
with 10 m cable length	6 020 352
with 15 m cable length	6 020 872
Connection cable M 12, 8-pin, angled	
with 5 m cable length	6 021 343
with 15 m cable length	6 021 342
M 2000 Standard version	
Hirschmann cable connector, 6-pin + shield, straight, with **crimped terminals**	6 006 612
Hirschmann cable connector, 6-pin + shield, angled, with **screw terminals**	6 007 363
M 2000-A/P Standard version	
Hirschmann cable connector, 11-pin + shield, straight, with **crimped terminals**	6 020 757
Hirschmann cable connector, 11-pin + shield, angled, with **crimped terminals**	6 020 758
M 2000/C 2000 Cascade version	
Cascade connection cables M 12 c/w pre-wired plug and socket:	
Cable length 0.25 m	6 021 000
Cable length 0.5 m	6 021 001
Cable length 1.0 m	6 021 002
Cable length 1.5 m	6 021 003
Cable length 2.0 m	6 021 004
Cable length 2.5 m	6 021 005
Cable length 3.0 m	6 021 006
M 2000/C 2000 with integral restart interlock (RES) version	
Connection cable with M 12, 8-pin plug, straight, with connection for reset button	6 021 204
with 5 m connection cable	6 021 205
with 15 m connection cable	
Connection cable with M 12, 8-pin plug, angled, with connection for reset button	6 021 830
with 5 m connection cable	6 021 831
with 15 m connection cable	6 021 238
Pre-wired connector for deselection of restart interlock, M 12 Lumberg connector	

Table 11-1: Accessories, C 2000 and M 2000

© SICK AG • Sicherheitstechnik • Germany • All rights reserved

Article	Part no.
Alignment aid Laser alignment aid AR 60 - Adapter for small housing C 2000 - Adapter for large housing C 2000/M 2000	 1 015 741 4 032 461 4 032 462
Mounting kit 1 *), hinged (swivel mount, x4) for C 2000 with protective field height 150 ... 1200 mm (small housing)	2 019 649
Mounting kit 2 *), hinged (Swivel mount, x4) for C 2000 with protective field height 1350 ... 1800 mm and M 2000 Standard version (large housing)	2 019 659
Mounting kit 6, hinged (x4) Side bracket for C 2000 and M 2000	2 019 506
Mounting kit 9, hinged (swivel mount, x2) for sender/receiver unit M 2000-A/P and hinged (side bracket, x2) for corner mirror M 2000-A/P	2 021 569
Mirror column 400, mounted complete, horizontal deflection	1 015 040
Mirror column 500, mounted complete, horizontal deflection	1 015 041
Device column with front cut-out panel, for M 2000, 2-beam, 500 mm Beam gap and M 2000-A/P, incl. mounting kit	2 021 328
Device column with front cut-out panel, for M 2000, 3-beam, 400 mm Beam gap, incl. mounting kit	2 021 329
Device column with front screen, for M 2000 and M 2000-A/P, (large housing),incl. mounting kit, 1200 mm length	2 021 330
Device column with front screen, for M 2000 and M 2000-A/P, (large housing), incl. mounting kit, 1500 mm length	2 021 331
Device column with front screen, for C 2000, Safety field height 1350 mm, M 2000 and M 2000-A/P, (large housing), incl. mounting kit, 1700 mm length	2 021 332
Device column with front screen, for C 2000 (small housing), Safety field height 150 ... 900 mm, incl. mounting kit, 1200 mm length	2 021 333
Device column with front screen, for C 2000 (small housing), Safety field height 150 ... 1200 mm, incl. mounting kit, 1500 mm length	2 021 242
Device column with front screen, for C 2000 (small housing), Safety field height 150 ... 1200 mm, incl. mounting kit, 1700 mm length	2 021 337
Shim plate for floor mounting columns, 3 mm thick	4 031 053

Table 11-1: Accessories, C 2000 and M 2000 (continued)
*) Under high vibration and shock conditions we recommend mounting kit 6

 © SICK AG • Sicherheitstechnik • Germany • All rights reserved

11.2 Diagrams and Tables

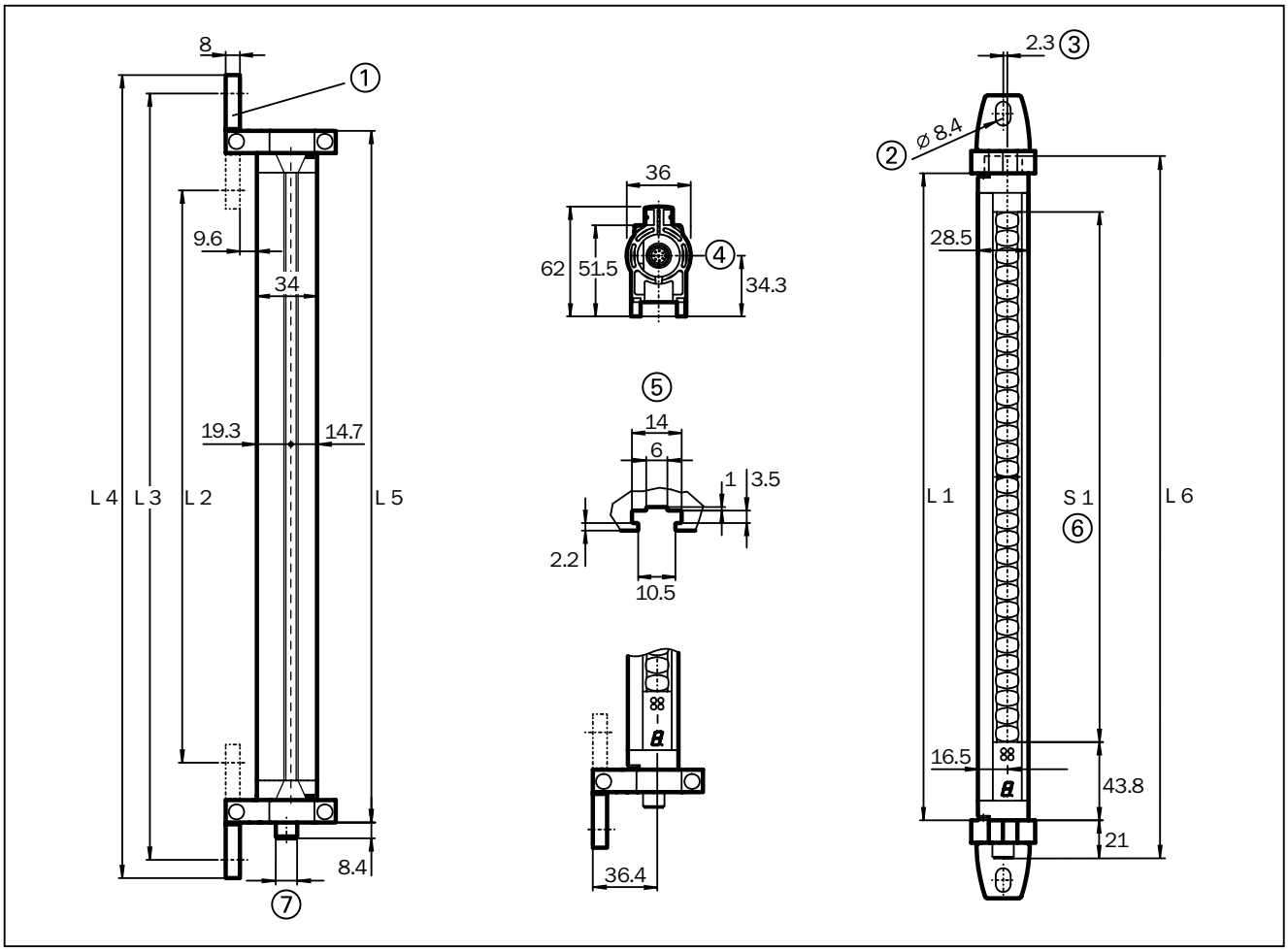

Fig. 11-1: Dimensional drawings and mechanical detail, C 2000 Standard (sender; receiver is mirror-image), large housing, swivel mount, protective field height S 1 = 1350 ... 1800 mm

① = Clamp 180°, rotating (mounting kit 2)
② = M 8 hexagon screw DIN 933 with washer DIN 9021 (not supplied)
③ = Centre line offset
④ = Alignment
⑤ = Slide nut channel for side mounting
⑥ = Protective field height
⑦ = Connector M 12 x 1 (Standard)

S 1	L 1	L 2	L 3	L 4	L 5	L 6
150	246	204	313	334	271	276
300	364	322	432	452	390	394
450	515	473	582	603	540	545
600	666	623	733	754	691	696
750	816	774	884	904	841	846
900	967	924	1034	1055	992	997
1050	1117	1075	1185	1205	1142	1147
1200	1266	1224	1334	1354	1292	1298

 © SICK AG • Sicherheitstechnik • Germany • All rights reserved

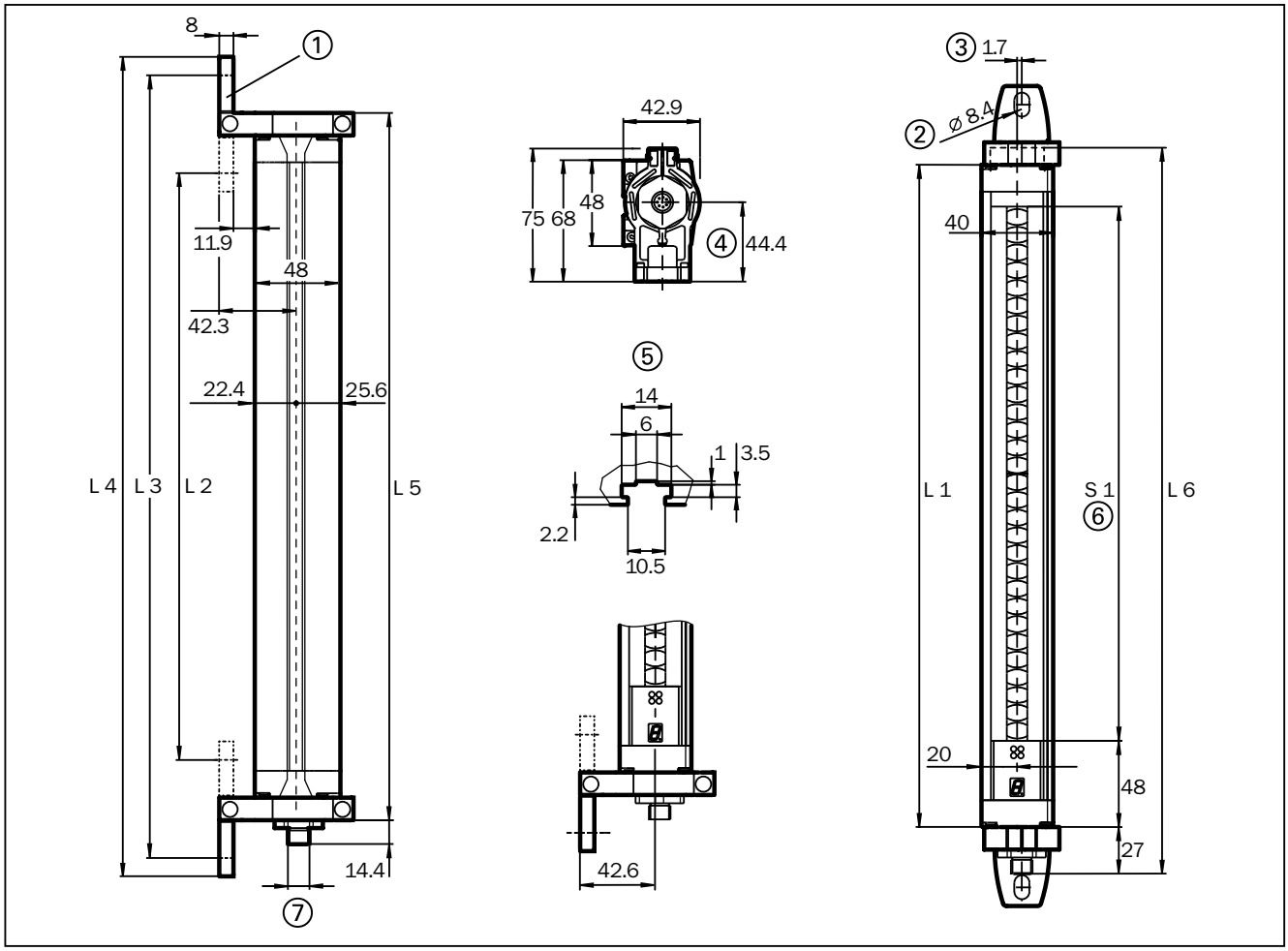

Fig. 11-2: Dimensional drawings and mechanical detail, C 2000 Standard (sender; receiver is mirror-image), large housing, swivel mount, protective field height S 1 = 1350 ... 1800 mm

① = Clamp 180°, rotating (mounting kit 2)
② = M 8 hexagon screw DIN 933 with washer DIN 9021 (not supplied)
③ = Centre line offset
④ = Alignment
⑤ = Slide nut channel for side mounting
⑥ = Protective field height
⑦ = Connector M 12 x 1 (Standard)

S 1	L 1	L 2	L 3	L 4	L 5	L 6
1350	1426	1384	1494	1514	1452	1463
1500	1577	1535	1644	1665	1602	1614
1650	1727	1685	1795	1815	1752	1764
1800	1878	1836	1945	1966	1903	1915

 © SICK AG • Sicherheitstechnik • Germany • All rights reserved

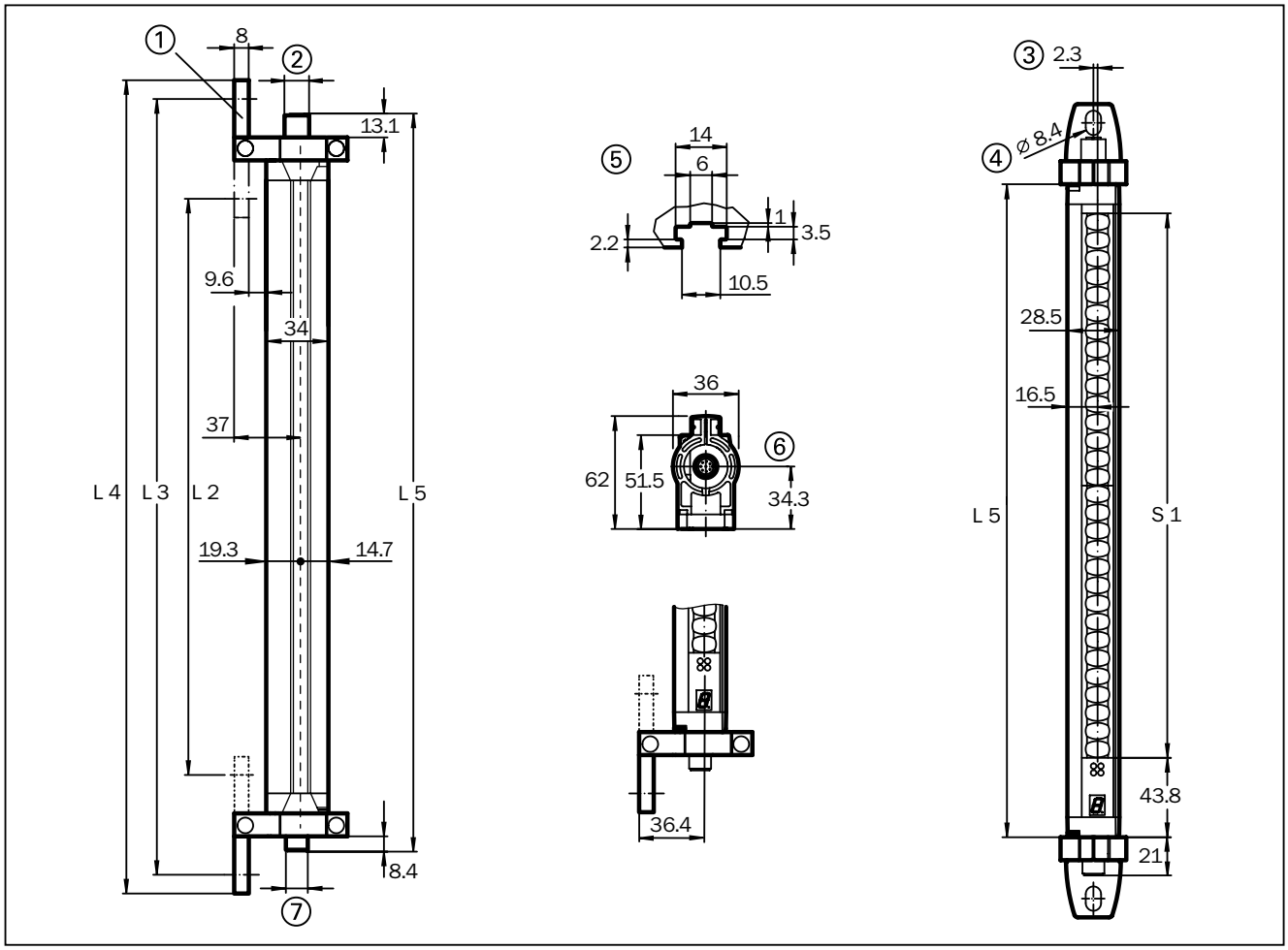

Fig. 11-3: Dimensional drawings and mechanical detail, C 2000 Cascade (sender; receiver is mirror-image), small housing, swivel mount, protective field height S 1 = 150 ... 1200 mm

① = Clamp 180°, 180° rotating (mounting kit 2)
② = Connector M 12 x 1 (Standard)
③ = Centre line offset
④ = M 8 hexagon screw DIN 933 with washer DIN 9021 (not supplied)
⑤ = Slide nut channel for side mounting
⑥ = Alignment
⑦ = Connector M 12 x 1 (Standard)

S 1	L 1	L 2	L 3	L 4	L 5
150	246	204	313	334	293
300	364	322	432	452	411
450	515	473	582	603	562
600	666	623	733	754	712
750	816	774	884	904	863
900	967	924	1034	1055	1013
1050	1117	1075	1185	1205	1164
1200	1266	1224	1334	1354	1313

 © SICK AG • Sicherheitstechnik • Germany • All rights reserved

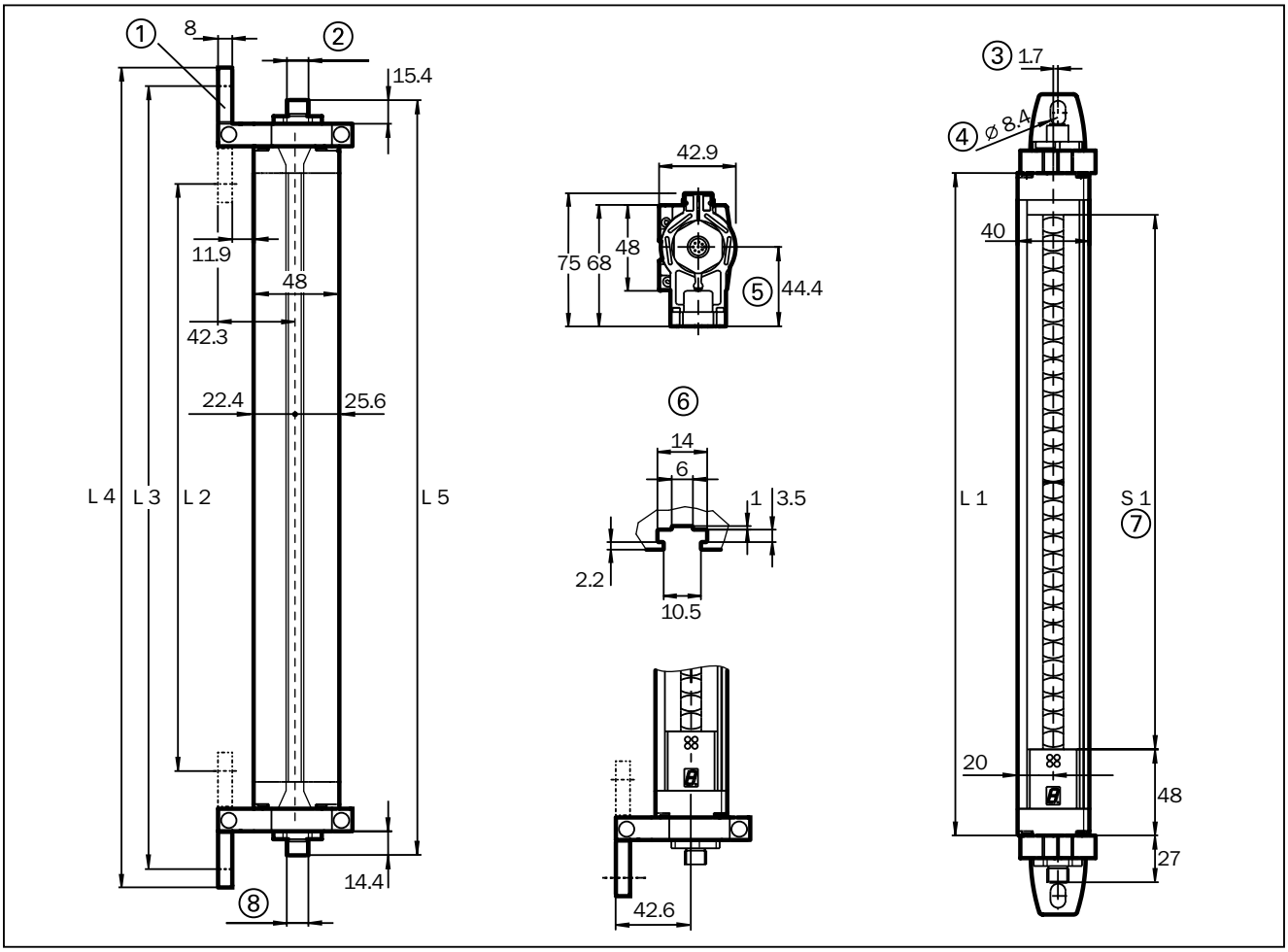

Fig. 11-4: Dimensional drawings and mechanical detail, C 2000 Cascade (sender; receiver is mirror-image), large housing, swivel mount, protective field height S 1 = 1350 ... 1800 mm

① = Clamp 180°, rotating (mounting kit 2)
② = Connector M 12 x 1 (Standard)
③ = Centre line offset
④ = M 8 hexagon screw DIN 933 with washer DIN 9021 (not supplied)
⑤ = Alignment
⑥ = Slide nut channel for side mounting
⑦ = Protective field height
⑧ = Connector M 12 x 1 (Standard)

S 1	L 1	L 2	L 3	L 4	L 5
1350	1426	1384	1494	1514	1481
1500	1577	1535	1644	1665	1632
1650	1727	1685	1795	1815	1782
1800	1878	1836	1945	1966	1933

 © SICK AG • Sicherheitstechnik • Germany • All rights reserved

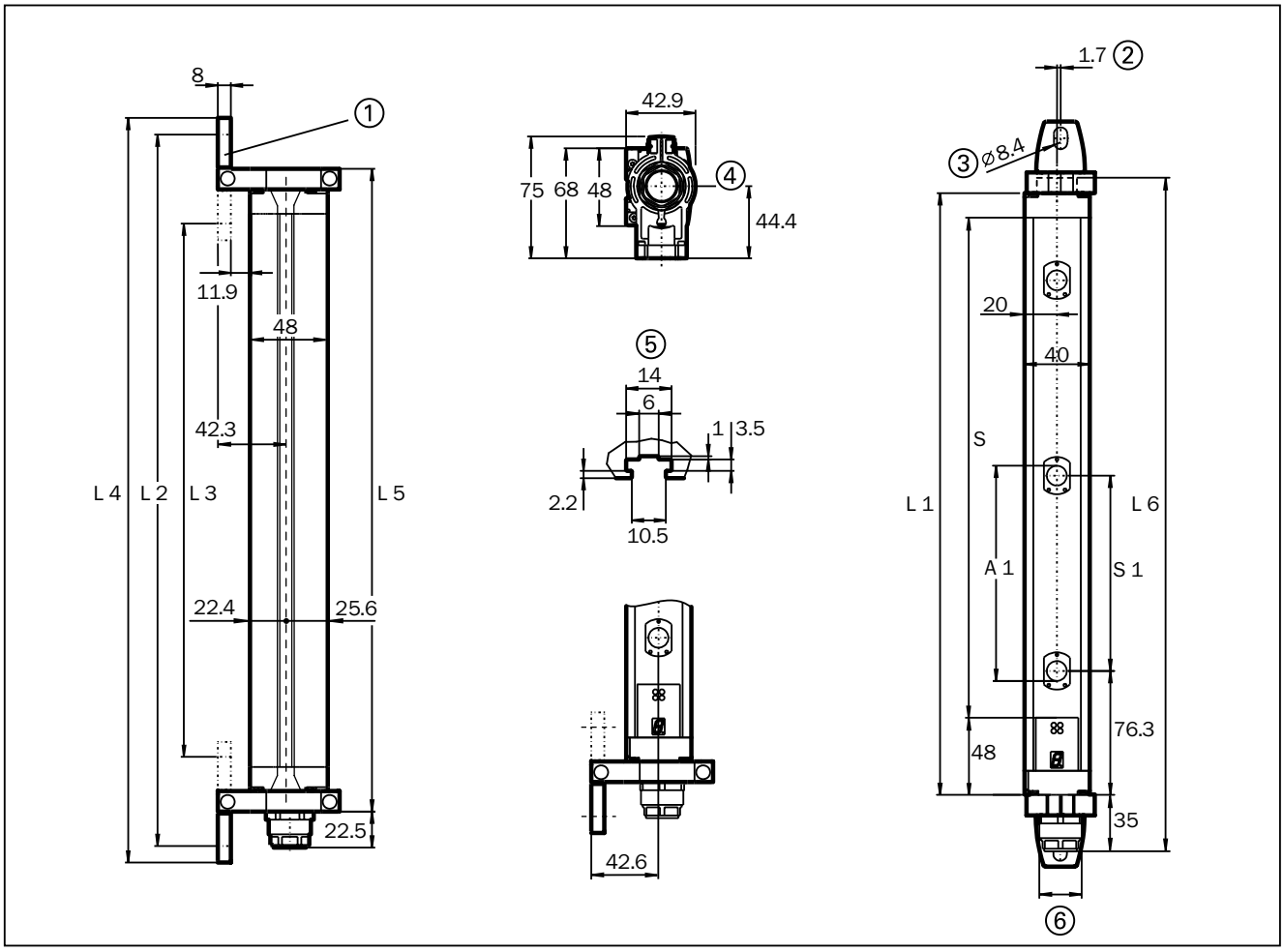

Fig. 11-5: Dimensional drawings and mechanical detail, M 2000 Standard (sender; receiver is mirror-image), swivel mount

① = Clamp 180°, rotating (mounting kit 2)
② = Centre line offset
③ = M 8 hexagon screw DIN 933 with washer DIN 9021 (not supplied)
④ = Alignment
⑤ = Slide nut channel for side mounting
⑥ = Hirschmann connector DIN 43651 (standard)

N	S 1	A 1	S	L 1	L 2	L 3	L 4	L 5	L 6
2	500	--	--	630	697	588	718	655	675
3	400	--	--	931	998	888	1019	956	976
4	300	--	--	1031	1098	989	1119	1056	1076
8	--	116	778	851	919	809	939	877	896
6	--	170	842	916	983	874	1004	941	960
7	--	170	999	1073	1140	1031	1161	1098	1118
8	--	170	1156	1231	1298	1189	1319	1256	1275
9	--	170	1313	1388	1455	1346	1476	1413	1433

N = Number of beams
S 1 = Beam gap
A 1 = Resolution
S = Protective field height

 © SICK AG • Sicherheitstechnik • Germany • All rights reserved

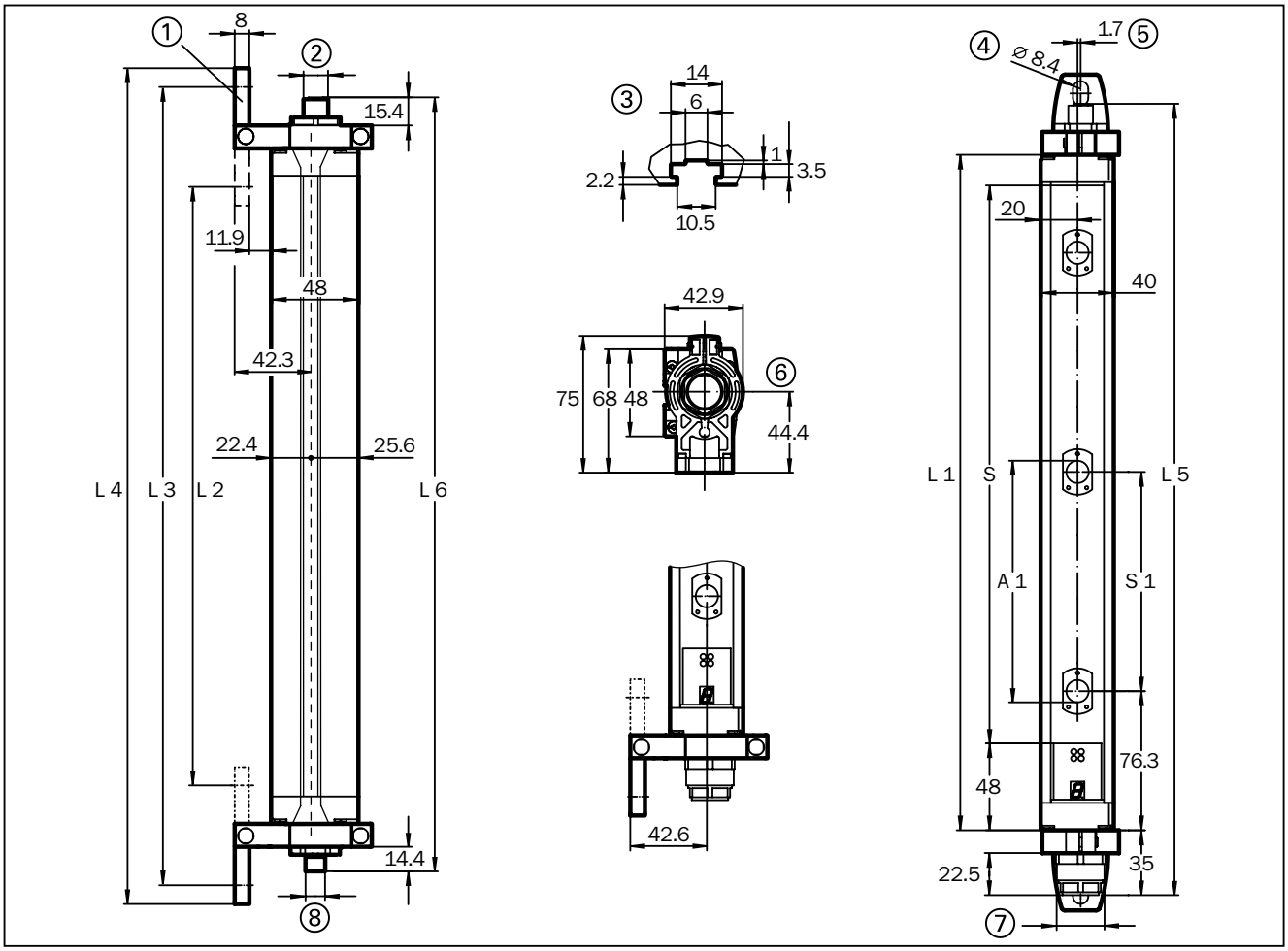

Fig. 11-6: Dimensional drawings and mechanical detail, M 2000 Cascade (sender; receiver is mirror-image), swivel mount

① = Clamp 180°, rotating (mounting kit 2)
② = Connector M 12 x 1 (Standard)
③ = Slide nut channel for side mounting
④ = M 8 hexagon screw DIN 933 with washer DIN 9021 (not supplied)
⑤ = Centre line offset
⑥ = Alignment
⑦ = Hirschmann connector DIN 43651 (standard)
⑧ = Connector M 12 x 1

N	S 1	A 1	S	L 1	L 2	L 3	L 4	L 5	L 6
2	500	--	--	630	697	588	718	694	686
3	400	--	--	931	998	888	1019	995	987
4	300	--	--	1031	1098	989	1119	1095	1087
8	--	116	778	851	919	809	939	915	907
6	--	170	842	916	983	874	1004	979	971
7	--	170	999	1073	1140	1031	1161	1137	1129
8	--	170	1156	1231	1298	1189	1319	1294	1286
9	--	170	1313	1388	1455	1346	1476	1452	1444

N = Number of beams
S 1 = Beam gap
A 1 = Resolution
S = Protective field height

 © SICK AG • Sicherheitstechnik • Germany • All rights reserved

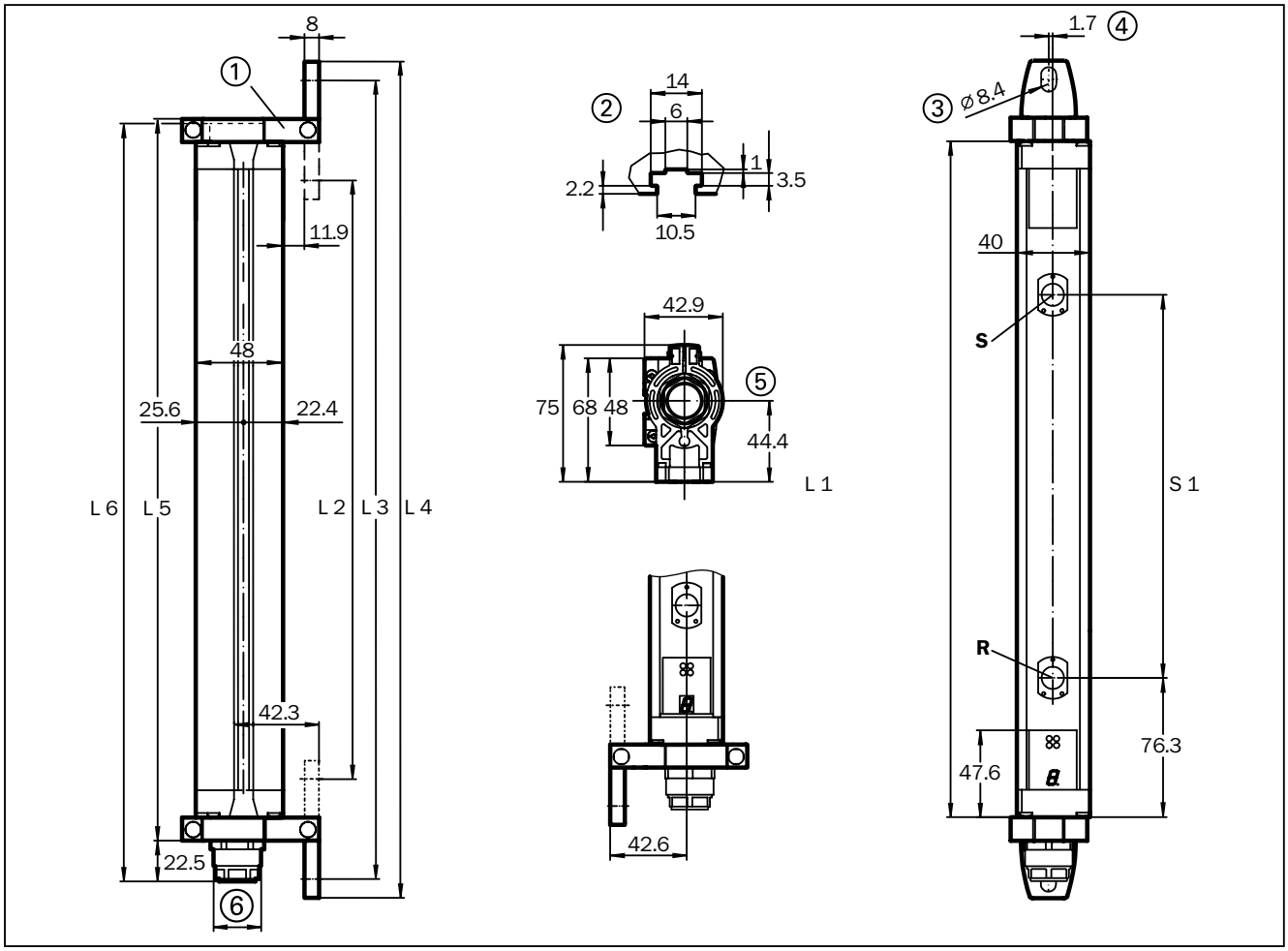

Fig. 11-7: Dimensional drawings and mechanical detail, M 2000-A/P, swivel mount

① = Clamp 180°, rotating (mounting kit 2)
② = Slide nut channel for side mounting
③ = M 8 hexagon screw DIN 933 with washer DIN 9021 (not supplied)
④ = Centre line offset
⑤ = Alignment
⑥ = Hirschmann connector DIN 43651 (standard)

N	S 1	L 1	L 2	L 3	L 4	L 5	L 6
2	500	653	611	720	741	678	700

S = Sender **R** = Receiver **N** = Number of beams

 © SICK AG • Sicherheitstechnik • Germany • All rights reserved

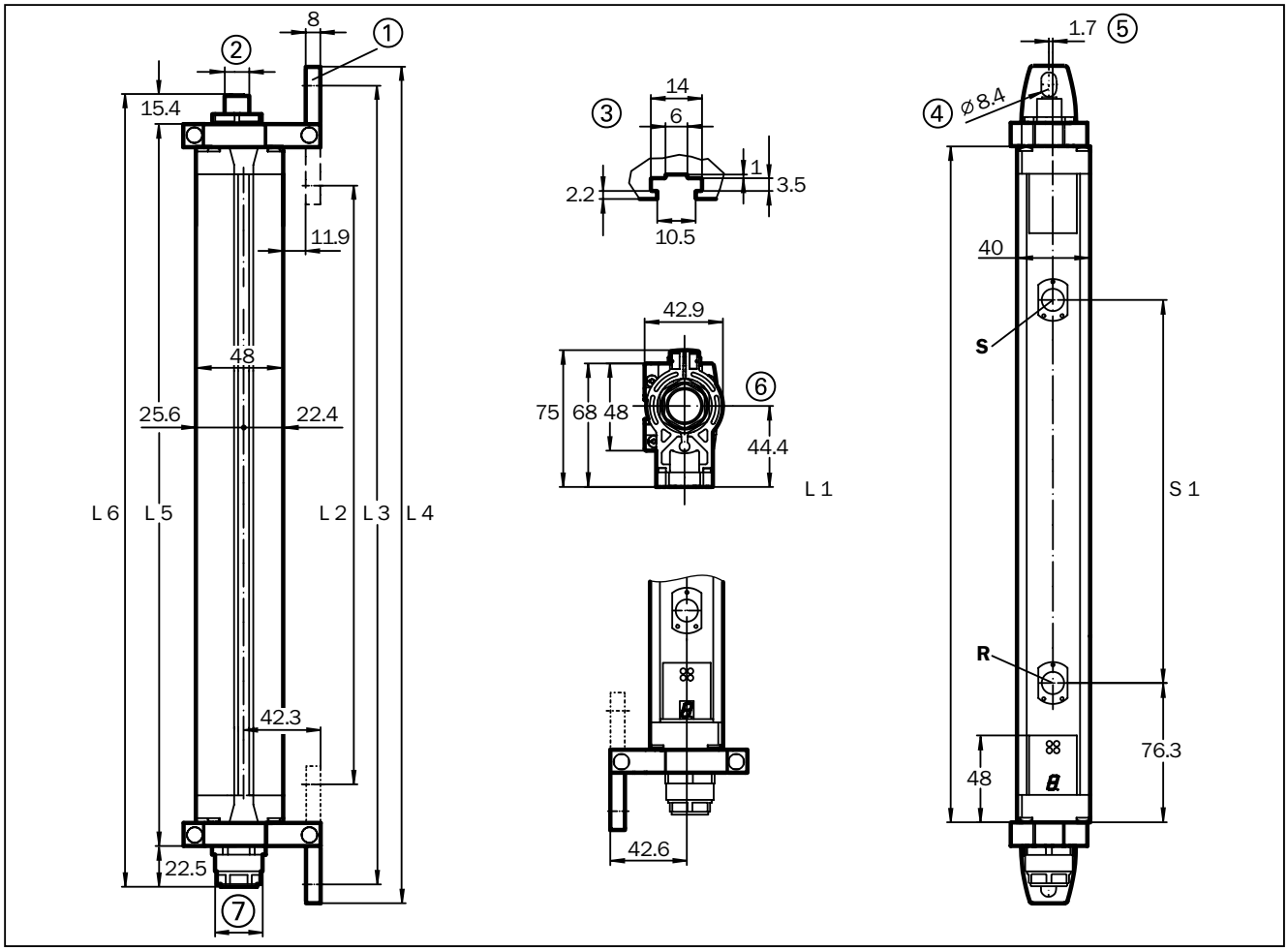

Fig. 11-8: Dimensional drawings and mechanical detail, M 2000-A/P, RES, swivel mount

① = Clamp 180°, rotating (mounting kit 2)
② = Connector M 12 x 1 (Standard)
③ = Slide nut channel for side mounting
④ = M 8 hexagon screw DIN 933 with washer DIN 9021 (not supplied)
⑤ = Centre line offset
⑥ = Alignment
⑦ = Hirschmann connector DIN 43651 (standard)

N	S 1	L 1	L 2	L 3	L 4	L 5	L 6
2	500	653	611	720	741	678	716

S = Sender **R** = Receiver **N** = Number of beams

 © SICK AG • Sicherheitstechnik • Germany • All rights reserved

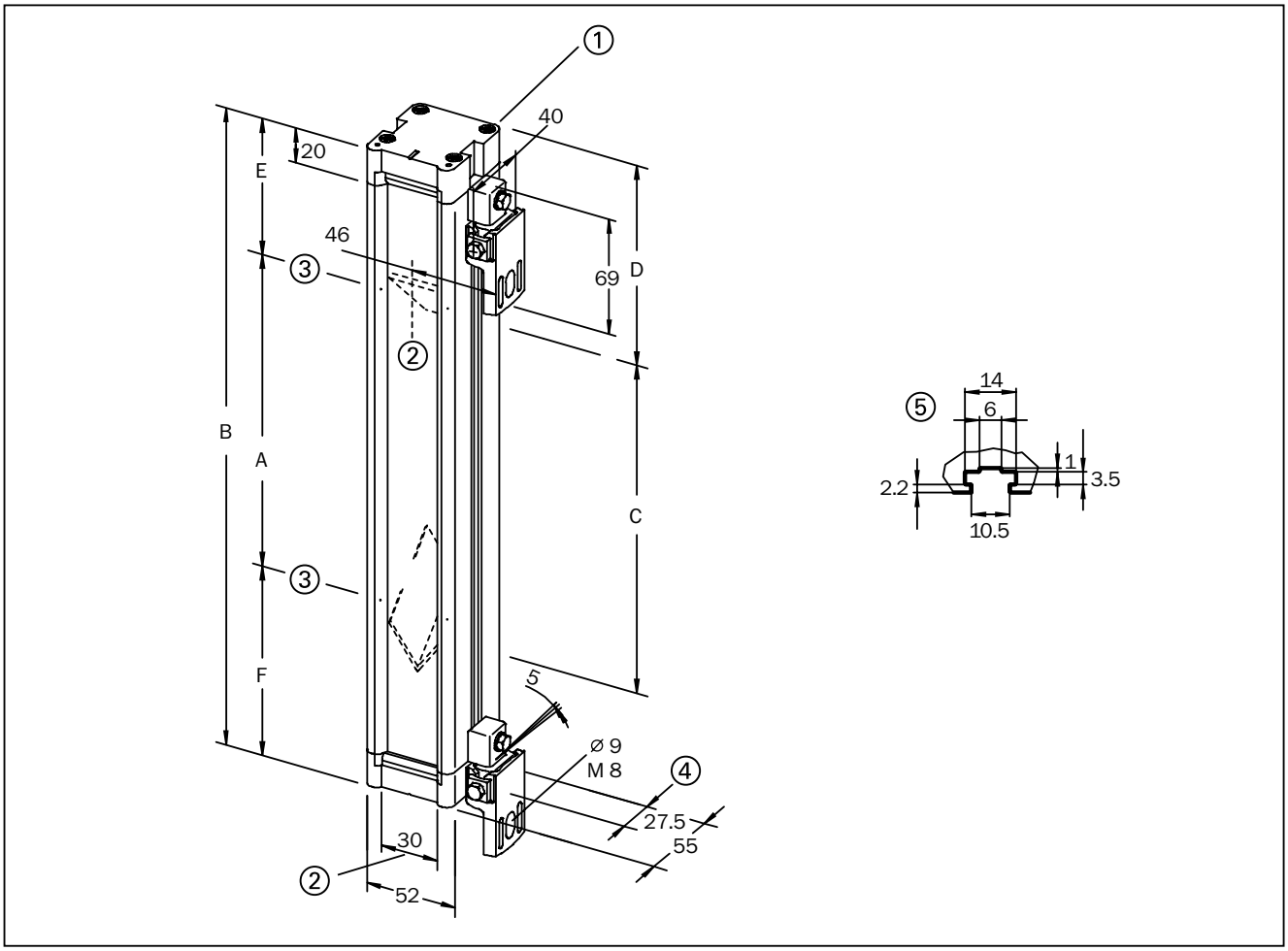

Fig. 11-9: Dimensional drawings and mechanical detail of the reflex mirror for M 2000-A/P

① = Rating plate on rear
② = Optical axis (= centre of front screen)
③ = Centre of beam
④ = Centre of groove
⑤ = Slide nut groove

	A	B	C	D	E	F
PSR 01-1501	500	668	481	105	81	87

 © SICK AG • Sicherheitstechnik • Germany • All rights reserved

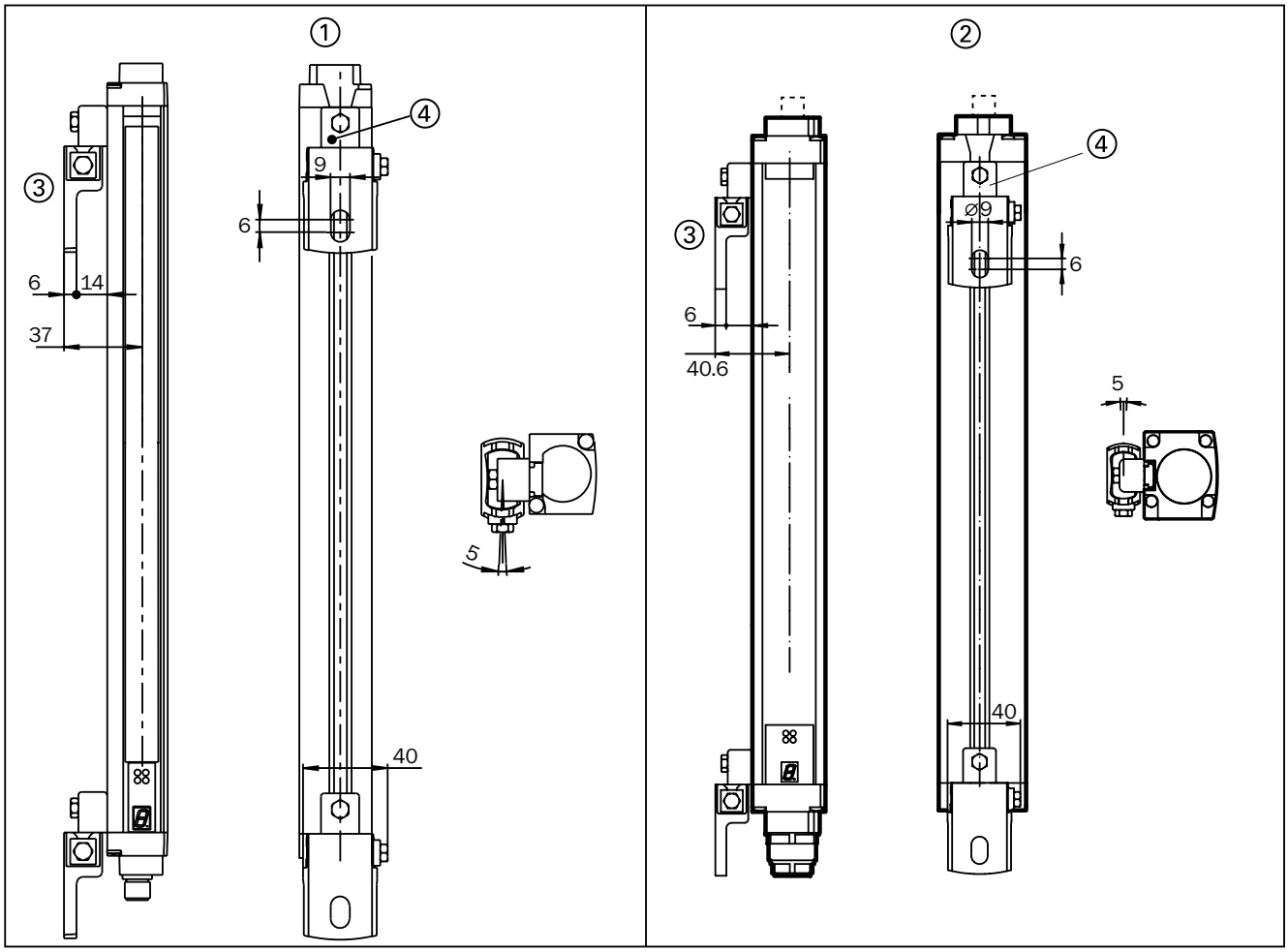

Fig. 11-10: Dimensional drawings and mechanical detail of the side brackets (sender; receiver is mirror-image)
① = Side bracket on small housing
② = Side bracket on large housing
③ = M 8 hexagon screw DIN 933 with washer DIN 9021 (not supplied)
④ = Mounting kit 6

 © SICK AG • Sicherheitstechnik • Germany • All rights reserved

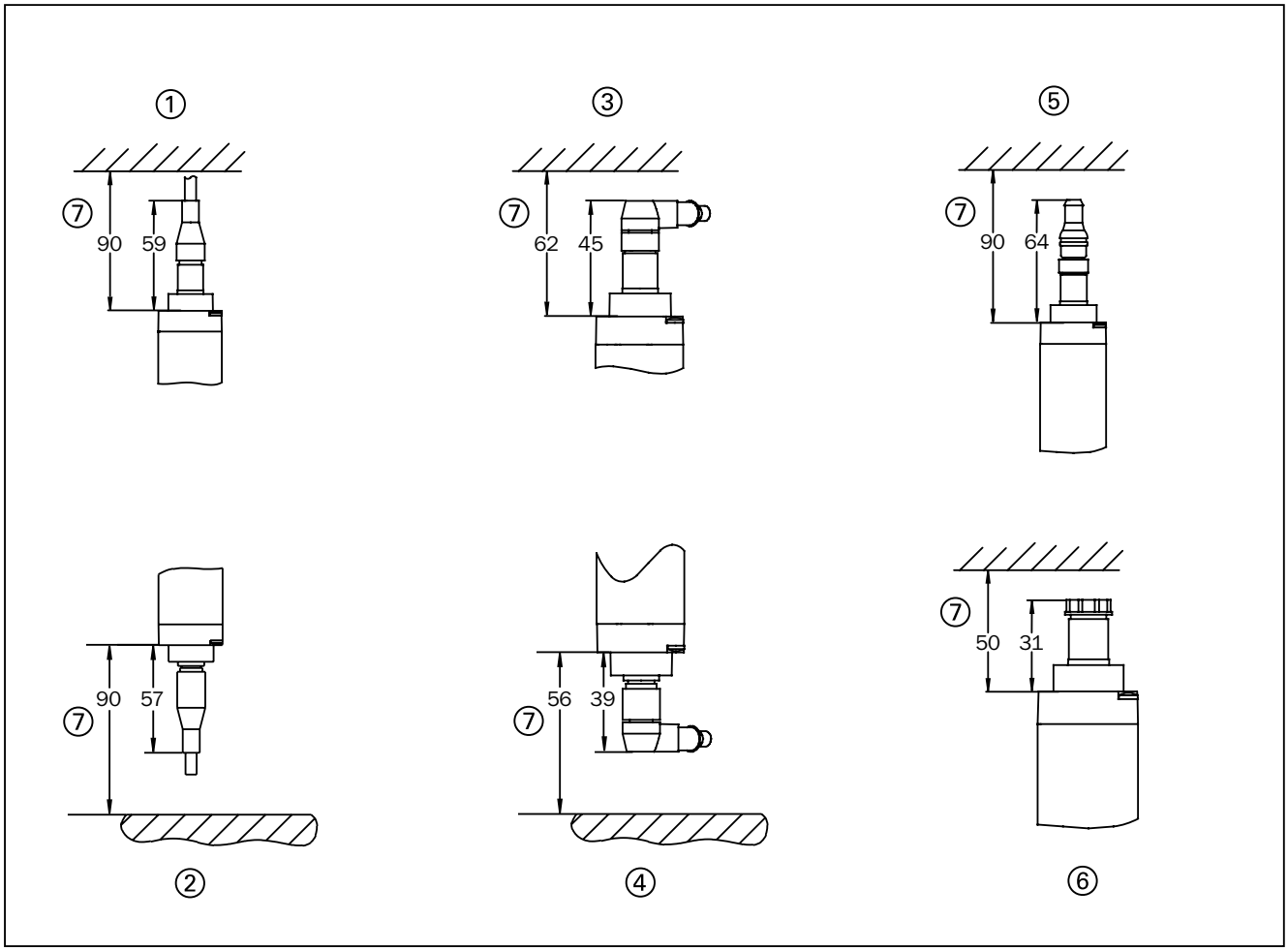

Fig. 11-11: Dimensional drawings and mechanical detail of the connectors for the small housing
① = M 12 connector, 8-pin, straight, with cascade connection cable
② = M 12 connector, 8-pin, straight, with standard connection cable
③ = M 12 connector, 8-pin, angled, with Restart connection cable
④ = M 12 connector, 8-pin, angled, with standard connection cable
⑤ = Terminating M 12 connector
⑥ = Connector cap
⑦ = Necessary connector clearance

 © SICK AG • Sicherheitstechnik • Germany • All rights reserved

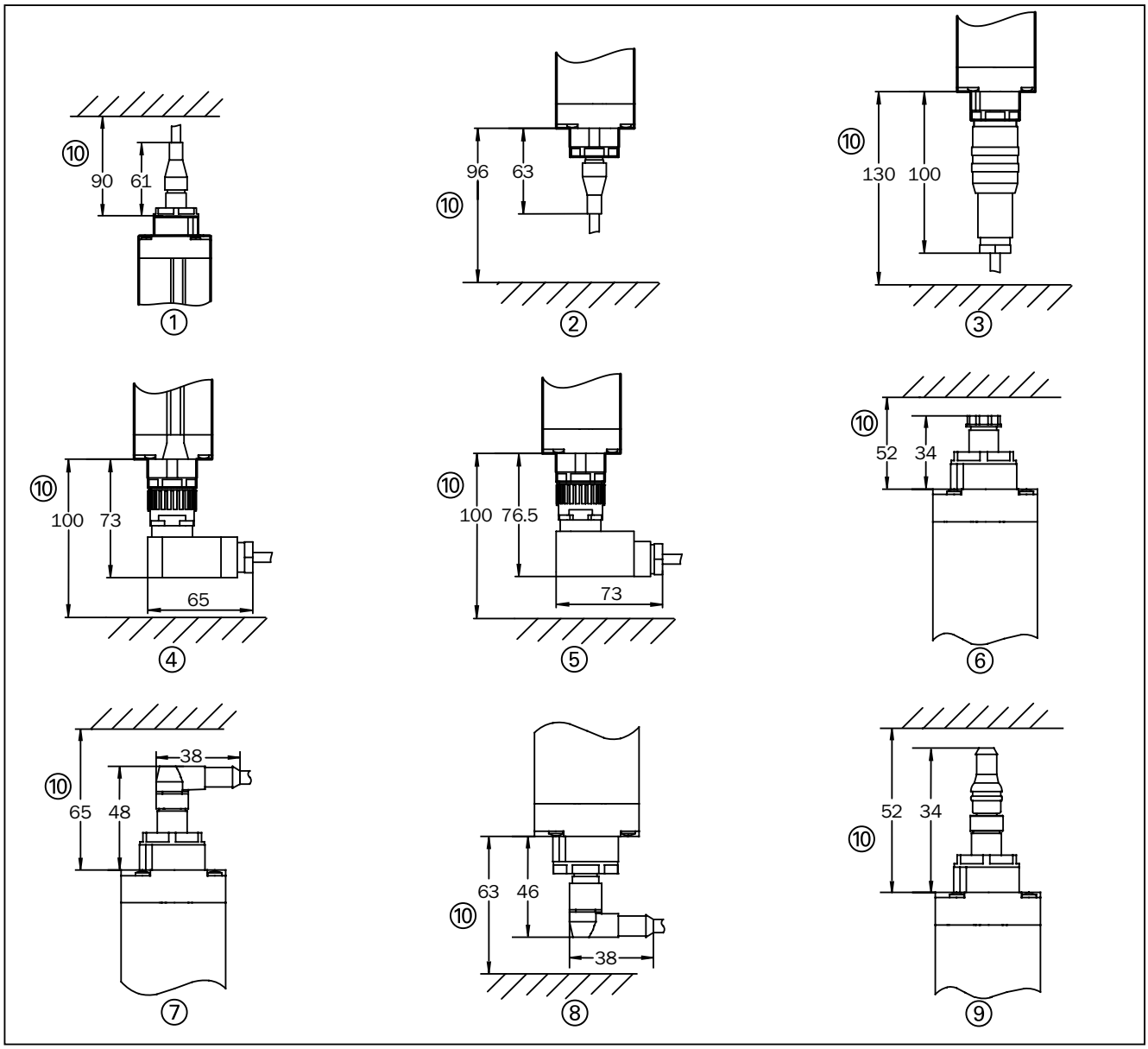

Fig. 11-12: Dimensional drawings and mechanical detail of the connectors for the large housing
① = M 12 connector, 8-pin, straight, with cascade connection cable
② = M 12 connector, 8-pin, straight, with standard connection cable
③ = Hirschmann connector , 8-pin + PE (sender) or 11-pin + PE (receiver) with crimp contacts
④ = Hirschmann connector, 11-pin + PE, angled, (receiver only) with crimp contacts
⑤ = Hirschmann connector, 6-pin + PE, angled, (sender only) screw connections
⑥ = Connector cap
⑦ = M 12 connector, 8-pin, angled, with Restart connection cable
⑧ = M 12 connector, 8-pin, angled, with standard connection cable
⑨ = Terminating M 12 connector
⑩ = Necessary connector clearance

 © SICK AG • Sicherheitstechnik • Germany • All rights reserved

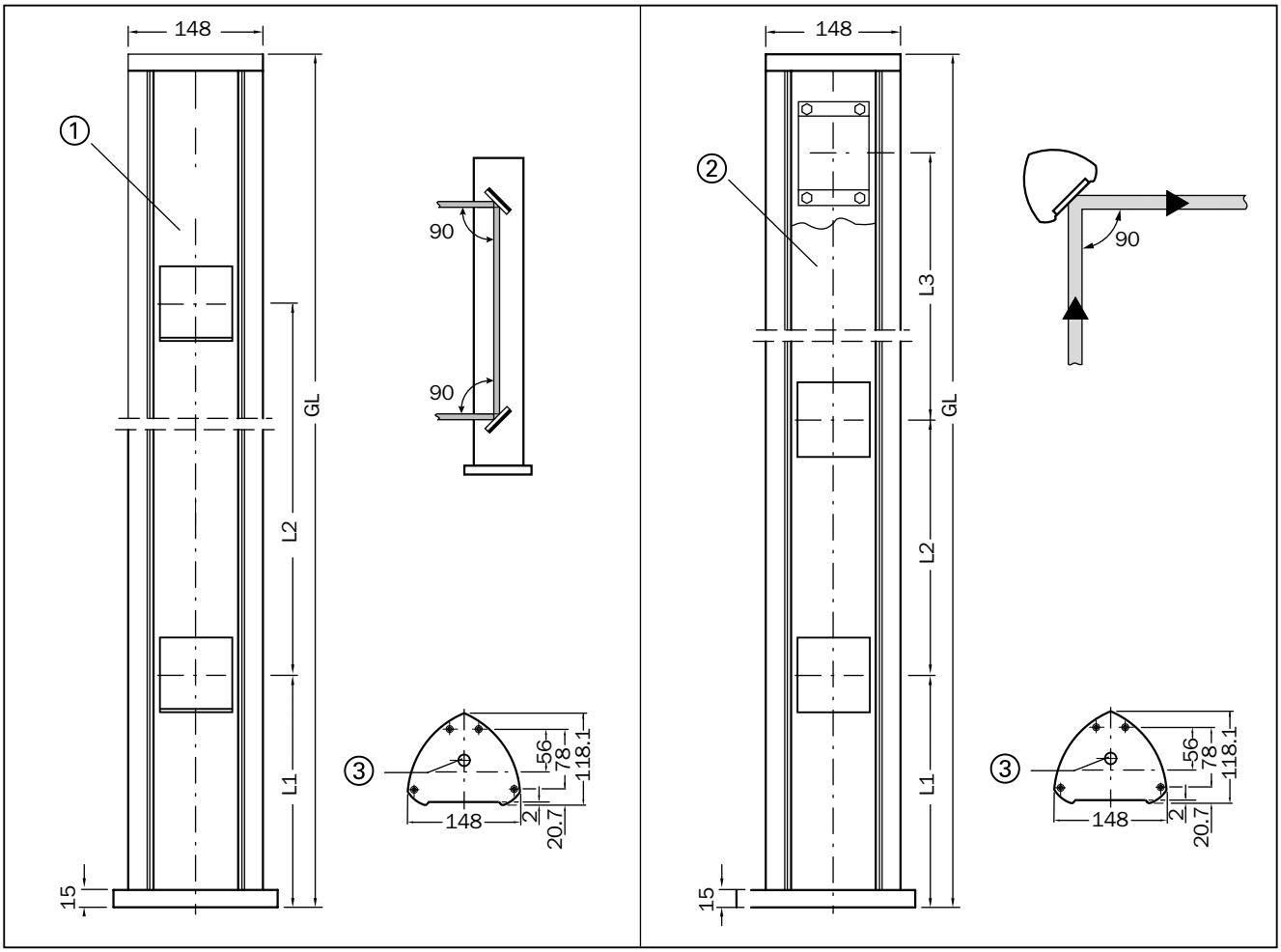

Fig. 11-13: Dimensional drawings and mechanical detail for mirror columns
① = Mirror column for vertical beam deflection with 45°-corner mirror
② = Mirror column horizontal beam deflection with 2 or 3 mirror modules
③ = Spirit level indicator

Article number	L 1	L 2	GL	Suitable for
1 015 042	400	500	1221	M20Z-02xxxxx

Dimensional data for mirror column with vertical beam deflection

Article number	Number of beams	L 1	L 2	L 3	GL	Suitable for
1 015 041	2	400	500	-	1221	M20X-02xxxxx
1 015 040	3	300	400	400	1221	M20X-03xxxxx

Dimensional data for mirror columns with horizontal beam deflection

Device	Op range/m without mirror	Op range/m with 1 mirror	Op range/m with 2 mirrors
C 2000	6	4.8	3.9
C 2000	19	15.3	12.3
M 2000	25	20.1	16.2
M 2000	70	56.3	45.4

Operating range reduction with use of mirrors, typical examples

 © SICK AG • Sicherheitstechnik • Germany • All rights reserved

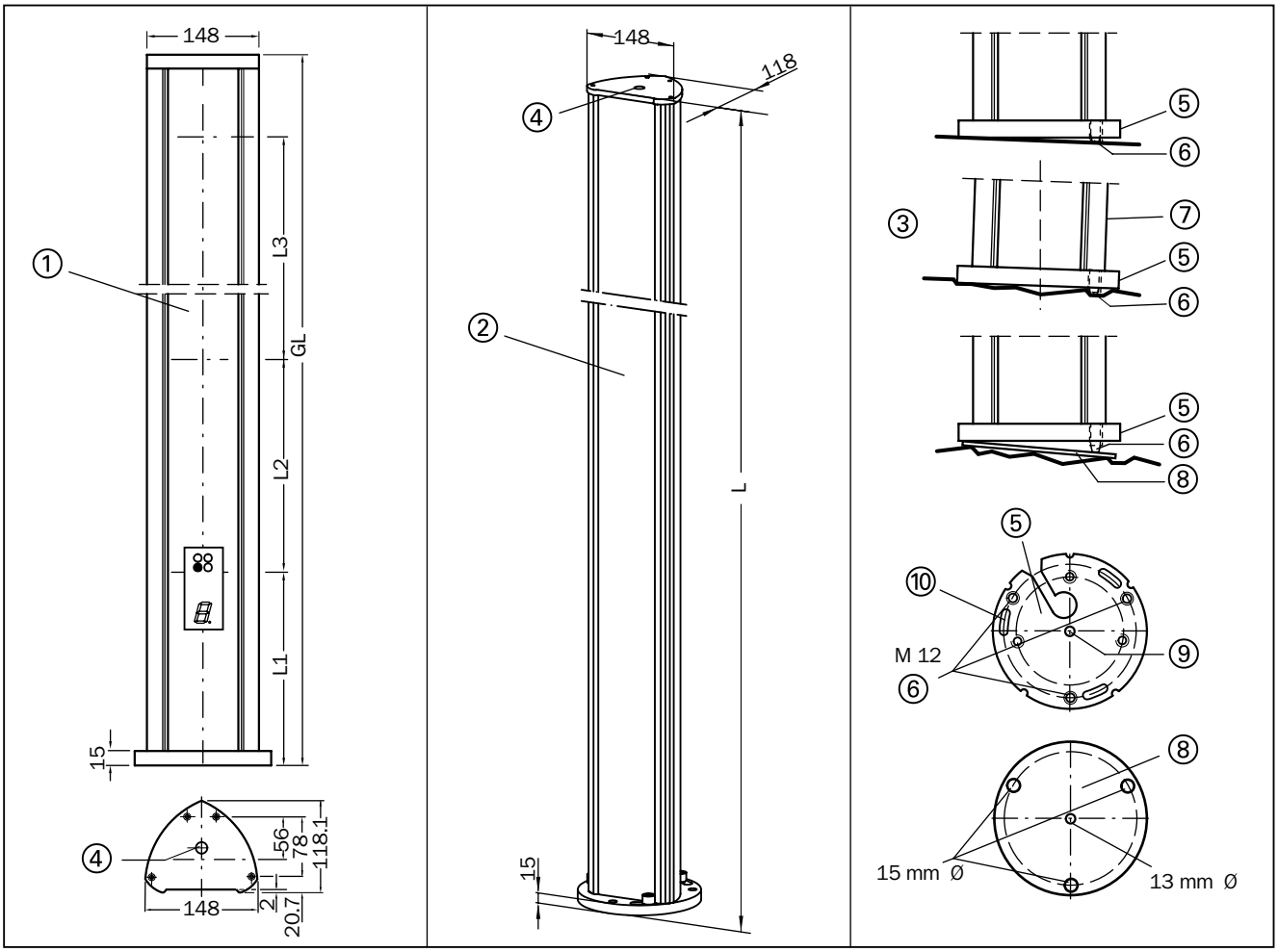

Fig. 11-14: Dimensional drawings and mechanical detail for device columns

① = Device column for M 2000 and M 2000-A/P with front cut-out panel
② = Device column for C 2000, M 2000 and M 2000-A/P with front screen
③ = Use of levelling screw and adjuster plate to on uneven mounting surface
④ = Spirit level indicator
⑤ = Base plate, 15 mm thick
⑥ = Levelling screws, M 12, hexagon socket
⑦ = Device, misaligned
⑧ = Adjuster plate, 3 mm thick, part no. 4 031 053, accessory
⑨ = Hole for M 12 rotary fixture, e.g. striker
⑩ = Slot width 13 mm

Article number	Number of beams	L 1	L 2	L 3	GL	Suitable for
2 021 329	3	300	400	400	1221	M20X-03xxx1xx
2 021 328	2	400	500	-	1221	M20X-03xxx1xx

Dimensional data for device columns with front cut-out panel

Article number	2 021 330	2 021 331	2 021 332	2 021 330	2 021 331	2 021 332
L	1221	1521	1721	1221	1521	1721
Suitable for	Devices which do not exceed the overall length					

Dimensional data for device columns with front screen
The actual operating range is reduced to 0.85 x of the rated operating range.
Example: C 2000 with 19 m operating range is reduced to 16.1 m operating range per sender/receiver system.

 © SICK AG • Sicherheitstechnik • Germany • All rights reserved

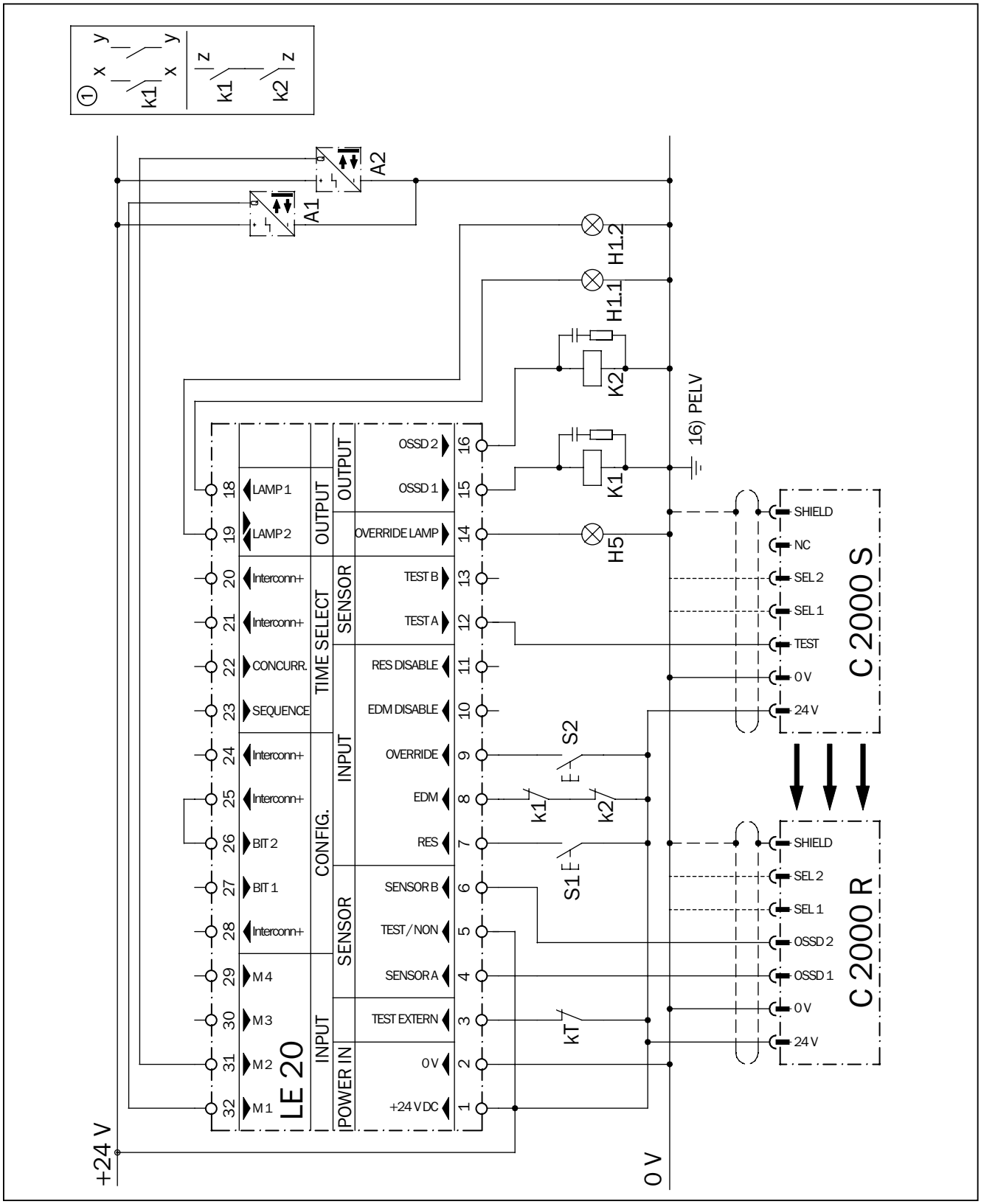

Fig. 11-15: Circuit diagram, C 2000 with LE 20

 © SICK AG • Sicherheitstechnik • Germany • All rights reserved

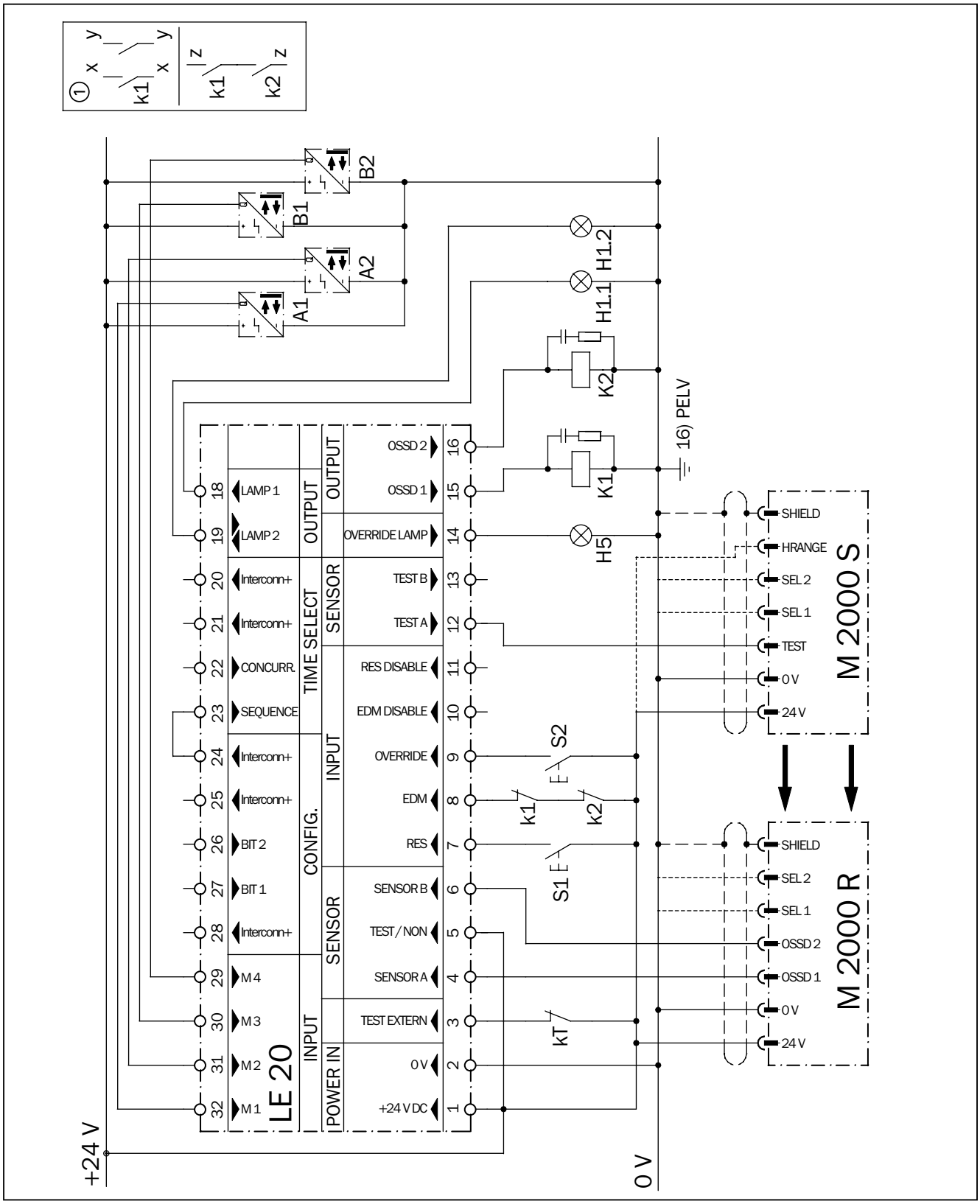

Fig. 11-16: Circuit diagram, M 2000 with LE 20

 © SICK AG • Sicherheitstechnik • Germany • All rights reserved

11.3 Declaration of conformity

SICK

EC Declaration of Conformity

Under the terms of EC Machine Directive 98/37/EEC, Appendix VI

We hereby declare that the devices

of the product family C2000

are safety components for a machine constructed as per the EC directive 98/37/EEC art. 1 para. 2. This declaration will lose its validity if any modification to a device used in the plant is made without prior consultation.

We employ a quality system certified by the DQS (German Quality Assurance Society), No. 19 462, as per ISO 9001 and have therefore observed the regulations in accordance with module H as well as the following EC directives and EN standards during development and production:

1. ***EC directives***	EC machine directive 98/37/EEC, as per 91/368/EEC,93/68/EEC,93/44/EEC EC EMC directive 89/336/EEC as per 92/31/EEC, 93/68/EEC, 93/465/EEC			
2. ***Harmonized standards and preliminary standards used***	DIN EN 954-1	Safety-related components of controllers	Ed.	97-03
	DIN EN 60204-1	Electr. equip. of mach.	Ed.	93-06
	DIN EN 61496-1	Safety of mach., active opto-electronic protective devices (AOPD)	Ed.	98-06
	IEC 61496-2	Safety of mach., active opto-electronic protective devices (AOPD)	Ed.	97-00
	DIN V VDE 0801/A1	Basic principles for computers in systems with safety functions	Ed.	94-10
3. ***Test result***	EN 61496	BWS type 2 (BWS-T)		

Conformance of a type sample belonging to the above-mentioned product family with the regulations from the EC machine directive has been certified by:

Address of notified authority (Germany)	TÜV Rheinland Am Grauen Stein D-51105 Köln
EC type sample test No.	BB981147101 dated 1998-10-08 BB991151401 dated 1999-10-14

The CE mark was affixed to the appliance in conformance with directive 89/336/EEC.

Waldkirch/Br., 2000-06-05

i.V. Dr. Plasberg
(Head of Development
Division Safety Systems)

ppa. Zinober
(Head of Production
Division Safety Systems)

The declaration certifies conformance with the listed directives, but does not guarantee product characteristics. The safety instructions contained in the product documentation must be observed.

SICK AG
Sebastian-Kneipp-Straße 1 · D-79183 Waldkirch
Telefon 0 76 81-2 02-0
Telefax 0 76 81-2 02-38 63
www.sick.de

Aufsichtsrat: Gisela Sick (Ehrenvorsitzende)
Dr. Horst Skoludek (Vorsitzender)
Vorstand: Volker Reiche (Vorsitzender)
Anne-Kathrin Deutrich
Dieter Fischer
Dr. Robert Bauer (Stellvertr.)

Sitz: Waldkirch i. Br.
Handelsregister:
Emmendingen
HRB 355 W

 © SICK AG • Sicherheitstechnik • Germany • All rights reserved

SICK

EC Declaration of Conformity

Under the terms of EC Machine Directive 98/37/EEC, Appendix VI

We hereby declare that the devices

of the product family M2000

are safety components for a machine constructed as per the EC directive 98/37/EEC art. 1 para. 2. This declaration will lose its validity if any modification to a device used in the plant is made without prior consultation.

We employ a quality system certified by the DQS (German Quality Assurance Society), No. 19 462, as per ISO 9001 and have therefore observed the regulations in accordance with module H as well as the following EC directives and EN standards during development and production:

1. ***EC directives*** EC machine directive 98/37/EEC, as per 91/368/EEC,93/68/EEC,93/44/EEC
   EC EMC directive 89/336/EEC as per 92/31/EEC, 93/68/EEC, 93/465/EEC

2. ***Harmonized standards and preliminary standards used***

DIN EN 954-1	Safety-related components of controllers	Ed.	97-03
DIN EN 60204-1	Electr. equip. of mach.	Ed.	93-06
DIN EN 61496-1	Safety of mach., active opto-electronic protective devices (AOPD)	Ed.	98-06
IEC 61496-2	Safety of mach., active opto-electronic protective devices (AOPD)	Ed.	97-00
DIN V VDE 0801/A1	Basic principles for computers in systems with safety functions	Ed.	94-10

3. ***Test result*** EN 61496 BWS type 2 (BWS-T)

Conformance of a type sample belonging to the above-mentioned product family with the regulations from the EC machine directive has been certified by:

Address of notified authority (Germany) TÜV Rheinland
Am Grauen Stein
D-51105 Köln

EC type sample test No. BB981147102 dated 1998-10-08
BB991151402 dated 1999-10-14

The CE mark was affixed to the appliance in conformance with directive 89/336/EEC.

Waldkirch/Br., 2000-06-05

i.V. Dr. Plasberg
(Head of Development
Division Safety Systems)

ppa. Zinober
(Head of Production
Division Safety Systems)

The declaration certifies conformance with the listed directives, but does not guarantee product characteristics. The safety instructions contained in the product documentation must be observed.

SICK AG
Sebastian-Kneipp-Straße 1 · D-79183 Waldkirch
Telefon 0 76 81-2 02-0
Telefax 0 76 81-2 02-38 63
www.sick.de

Aufsichtsrat: Gisela Sick (Ehrenvorsitzende)
Dr. Horst Skoludek (Vorsitzender)
Vorstand: Volker Reiche (Vorsitzender)
Anne-Kathrin Deutrich
Dieter Fischer
Dr. Robert Bauer (Stellvertr.)

Sitz: Waldkirch i. Br.
Handelsregister:
Emmendingen
HRB 355 W

 © SICK AG • Sicherheitstechnik • Germany • All rights reserved

11.4 Checklist

Checklist for machine manufacturer/installer for the installation of Electro Sensitive Protective Equipment (ESPE)

Dependent upon the application, the below listed checks are a minimum when placing an ESPE in operation for the first time.

For reference purposes the list should be retained or stored with the machine documents.

1. Are the relevant safety standards incorporated into the machine build? Will they satisfy the Regulations? Yes ◯ No ◯
2. Are the standards listed in the Declaration of Conformity? Yes ◯ No ◯
3. Is the ESPE the correct Type and interfaced to the correct Category? Yes ◯ No ◯
4. Is access to the danger zone / point of danger only possible through the ESPE? Yes ◯ No ◯
5. Are measures in place to prevent standing between the ESPE and the danger zone? If so, are these measures secured against removal? Yes ◯ No ◯
6. Are the mechanical means positioned to avoid reaching over, under or around? (see EN294) Yes ◯ No ◯
7. Has the overall machine stopping time been checked and documented? Yes ◯ No ◯
8. Is the resultant safety distance observed between the danger point and the ESPE? Yes ◯ No ◯
9. Is the ESPE correctly fixed and secured against movement after setting in its fixed position? Yes ◯ No ◯
10. Are the required protection measures against electric shock in place? Yes ◯ No ◯
11. Is the re-set / re-start switch for the ESPE installed and fitted to the correct standard? Yes ◯ No ◯
12. Are the OSSDs of the ESPE connected in accordance with the machine circuit diagram? Yes ◯ No ◯

 © SICK AG • Sicherheitstechnik • Germany • All rights reserved

13. Have the protective functions been inspected in accordance with the inspection instructions of this document? Yes ◯ No ◯

14. Are the protective functions effective in every setting of the operating mode switch? Yes ◯ No ◯

15. Are the switching elements controlled by the ESPE, e. g. contractors, valves monitored? Yes ◯ No ◯

16. Is the ESPE effective during the entire hazardous state? Yes ◯ No ◯

17. Is the hazardous state ended when the ESPE is switched on or off, as well as upon changing operation modes or on switching over to another protective device? Yes ◯ No ◯

18. Is the Daily Check Requirement sign positioned in a place visible to the operator? Yes ◯ No ◯

This checklist does not replace the initial commissioning of regular inspections by qualified personnel.

 © SICK AG • Sicherheitstechnik • Germany • All rights reserved